Filter pressure regulator, Series NL4-FRE

- G 1/2 G 3/4
- filter porosity 5 µm
- with pressure gauge
- suitable for ATEX



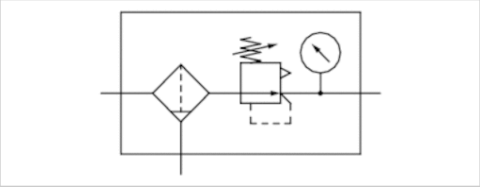

Type	1-part, Can be assembled into blocks
Parts	Filter pressure regulator
Mounting orientation	vertical
Certificates	suitable for ATEX
Working pressure min./max.	1,5 ... 16 bar
Ambient temperature min./max.	-10 ... 60 °C
Medium temperature min./max.	-10 ... 60 °C
Medium	Compressed air Neutral gases
Nominal flow Qn	6900 l/min
Regulator type	Diaphragm-type pressure regulator
Regulator function	with relieving air exhaust
Adjustment range min./max.	0,5 ... 10 bar
Pressure supply	single
Filter reservoir volume	50 cm³
Filter element	exchangeable
Weight	See table below

Technical data

Part No.		Port	filter porosity	Flow Qn	Condensate drain
0821300350		G 1/2	5 µm	6900 l/min	semi-automatic, open without pressure
0821300351		G 1/2	5 µm	6900 l/min	semi-automatic, open without pressure
0821300352		G 1/2	5 µm	6900 l/min	semi-automatic, open without pressure
0821300353		G 1/2	5 µm	6900 l/min	fully automatic, open without pressure
0821300354		G 1/2	5 µm	6900 l/min	fully automatic, open without pressure
0821300355		G 1/2	5 µm	6900 l/min	fully automatic, open without pressure
0821300380		G 3/4	5 µm	6900 l/min	semi-automatic, open without pressure
0821300381		G 3/4	5 µm	6900 l/min	semi-automatic, open without pressure
0821300382		G 3/4	5 µm	6900 l/min	semi-automatic, open without pressure
0821300383		G 3/4	5 µm	6900 l/min	fully automatic, open without pressure
0821300384		G 3/4	5 µm	6900 l/min	fully automatic, open without pressure
0821300385		G 3/4	5 µm	6900 l/min	fully automatic, open without pressure

Part No.	Pressure gauge	Reservoir	Protective guard	Weight
0821300350	with pressure gauge	Polycarbonate	-	1,19 kg
0821300351	with pressure gauge	Polycarbonate	Steel	1,28 kg
0821300352	with pressure gauge	Die cast zinc	-	1,41 kg
0821300353	with pressure gauge	Polycarbonate	-	1,26 kg
0821300354	with pressure gauge	Polycarbonate	Steel	1,35 kg

Part No.	Pressure gauge	Reservoir	Protective guard	Weight
0821300355	with pressure gauge	Die cast zinc	-	1,47 kg
0821300380	with pressure gauge	Polycarbonate	-	1,19 kg
0821300381	with pressure gauge	Polycarbonate	Steel	1,28 kg
0821300382	with pressure gauge	Die cast zinc	-	1,41 kg
0821300383	with pressure gauge	Polycarbonate	-	1,26 kg
0821300384	with pressure gauge	Polycarbonate	Steel	1,35 kg
0821300385	with pressure gauge	Die cast zinc	-	1,47 kg

Nominal flow Qn with secondary pressure p2 = 6 bar at Δp = 1 bar

Suitable for use in Ex zones 1, 2, 21, 22., Metal protective guard can be retrofitted for all polycarbonate reservoirs, Pressure gauge enclosed separately

Technical information

The pressure dew point must be at least 15 °C under ambient and medium temperature and may not exceed 3 °C .
Suitable for use in Ex zones 1, 2, 21, 22.
Note: Polycarbonate reservoirs are susceptible to solvents, supplementary information can be found at "Customer information".
A change in the flow direction (from air supply on the left to air supply on the right) occurs by rotating installation by 180° about the vertical axis. Please see the operating instructions for further details.
Also suitable for separation of fluid oil or water due to the design.
The rear pressure gauge connection on the pressure regulator is closed with a blanking plug, the front connection is open. Depending on the customer application, a second blanking plug may be necessary. Please order separately (see accessories).

Max. achievable compressed air class acc. to ISO 8573-1:2010 6 : 7 : -

Technical information

Material	
Housing	Die cast zinc
Front plate	Acrylonitrile butadiene styrene
Seals	Acrylonitrile butadiene rubber
Threaded bushing	Die cast zinc
Reservoir	Polycarbonate Die cast zinc
Protective guard	Steel
Filter insert	Polyethylene

Dimensions

Dimensions

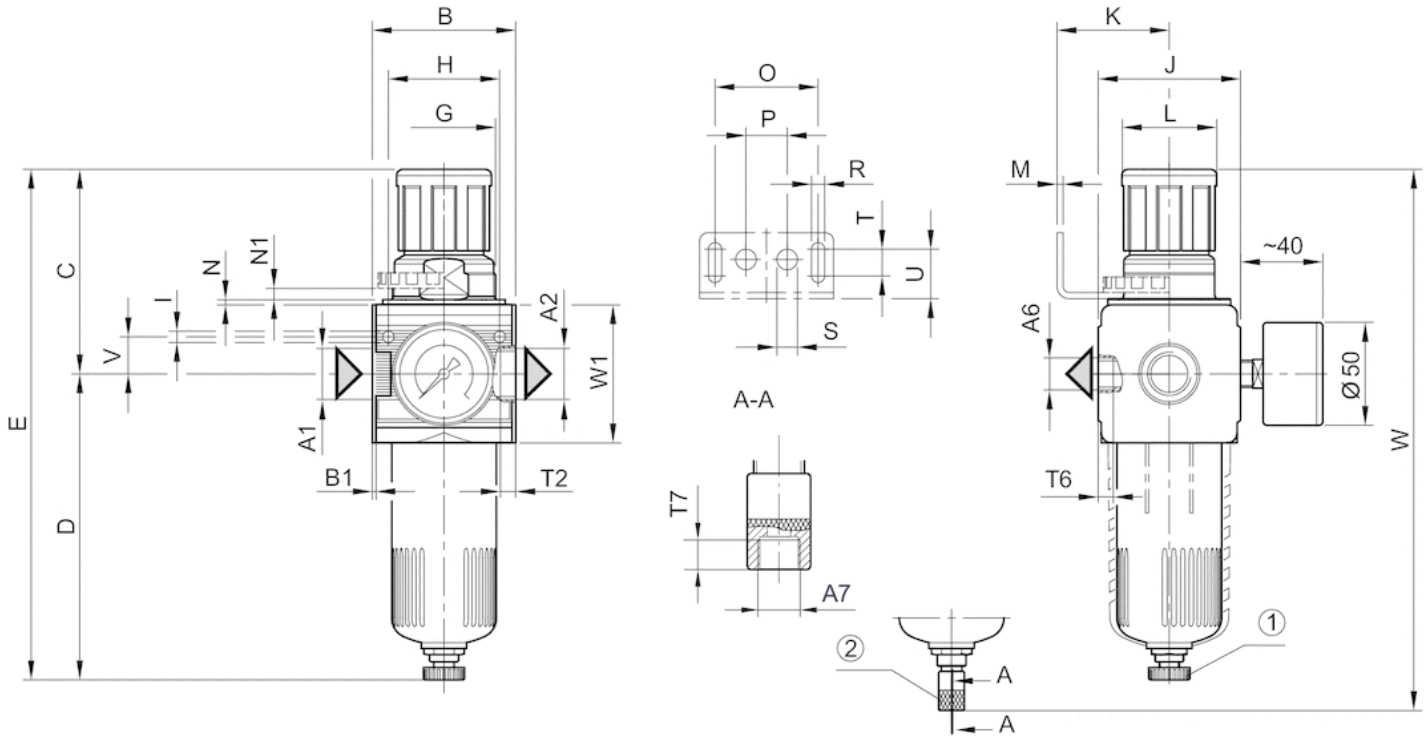

A1 = input
A2 = output
A6 = output
A7 = condensate drain
1) Semi-automatic condensate drain
2) fully automatic condensate drain

Dimensions in mm

A1	A2	A6	A7	B	B1	C	D	E	G	H	I	J	K	L	M	N	N1	O	P	R
G 1/2	G 1/2	G 1/4	G 1/8	69.6	1.8	98.3	146.5	244.8	M50x1,5	54	5.5	69	54.5	46	3	3	5.5	50	20	6.4
G 3/4	G 3/4	G 1/4	G 1/8	69.6	1.8	98.3	146.5	244.8	M50x1,5	54	5.5	69	54.5	46	3	3	5.5	50	20	6.4

S	T	T2	T6	T7	U	V	W	W1
10	13	13	7	8.5	24	18	262.8	67
10	13	13	7	8.5	24	18	262.8	67

Diagrams

Pressure characteristics curve

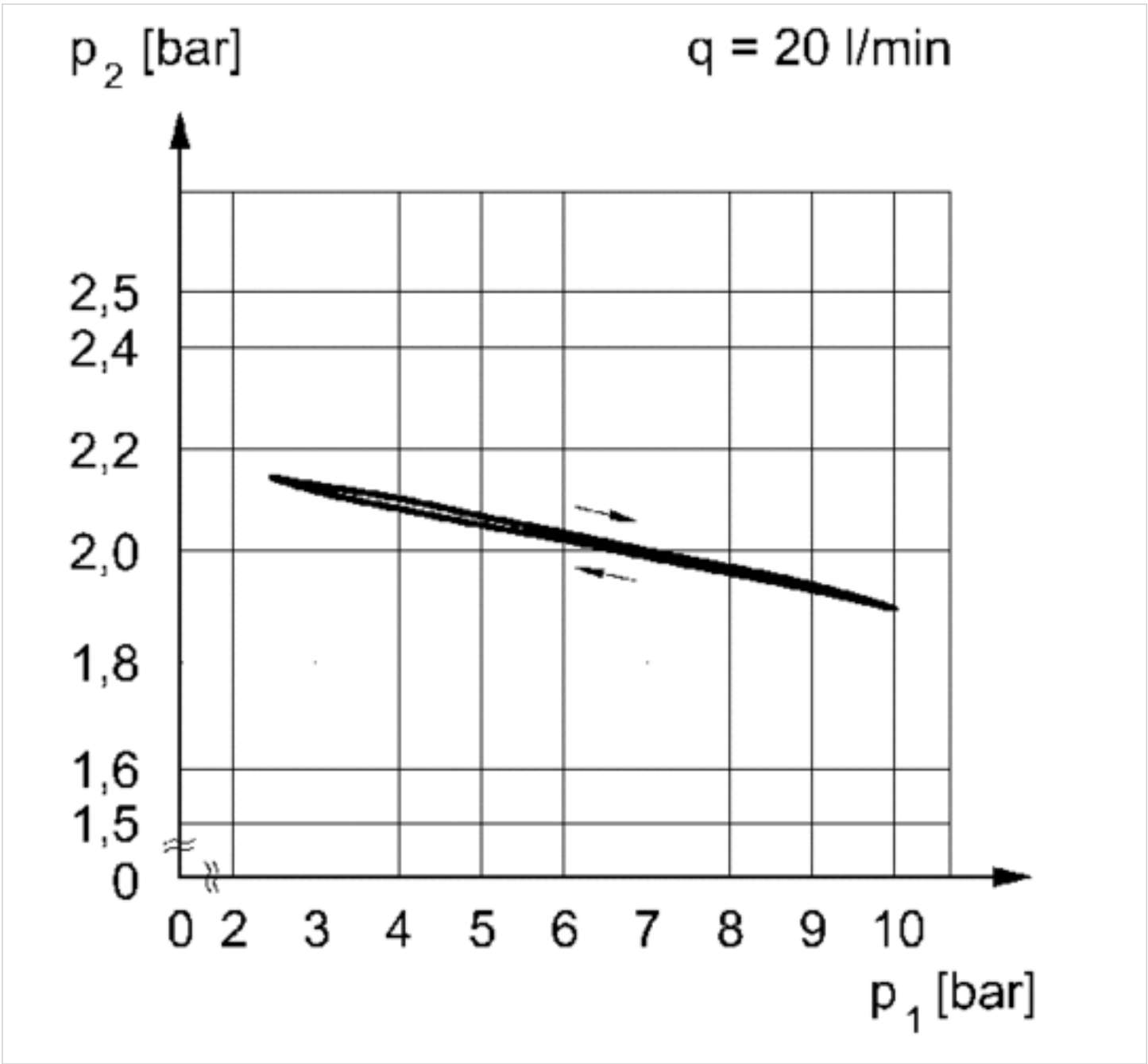

p1 = working pressure
p2 = secondary pressure

q = flow rate

Flow rate characteristic

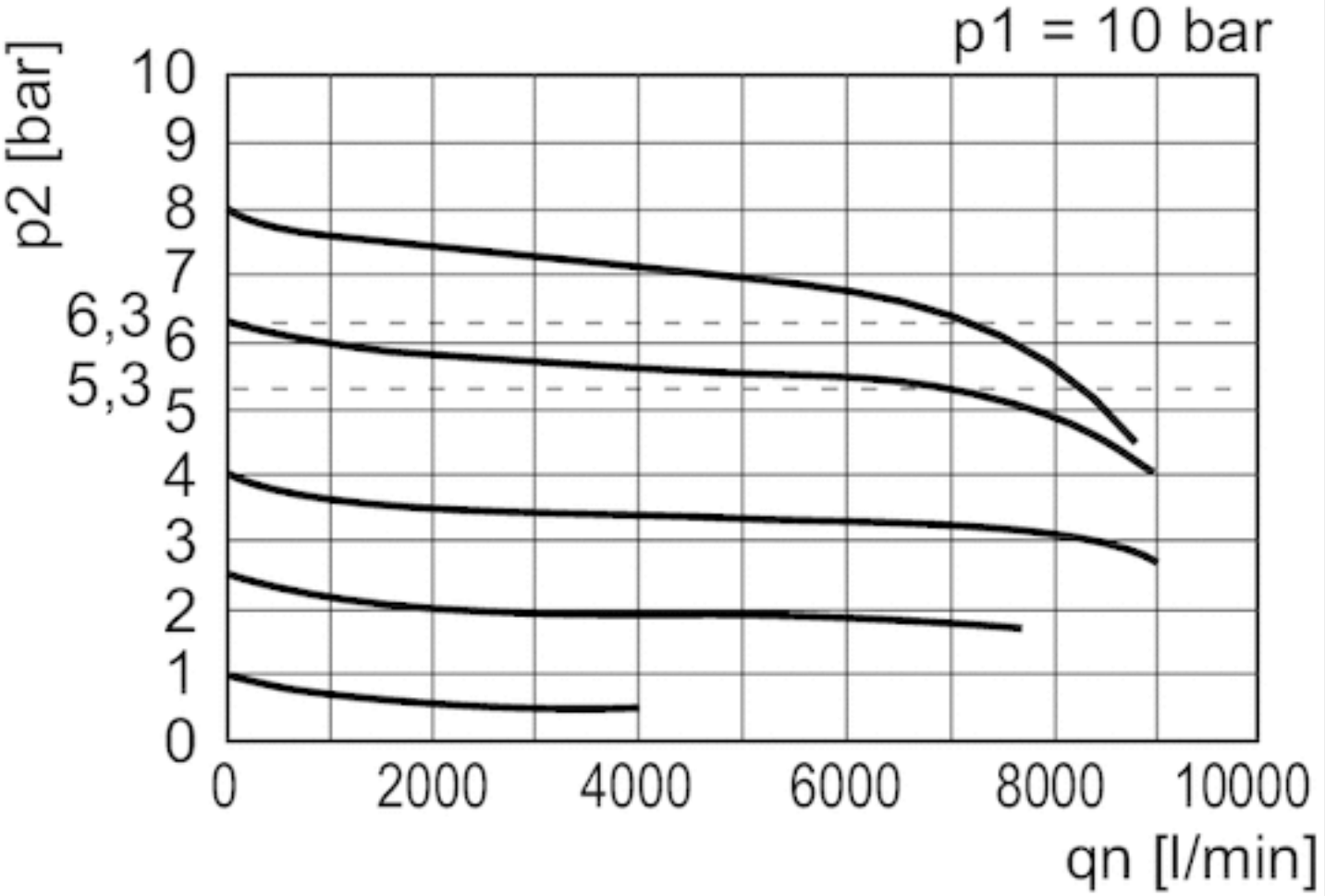

p1 = Working pressure
p2 = Secondary pressure
qn = Nominal flow