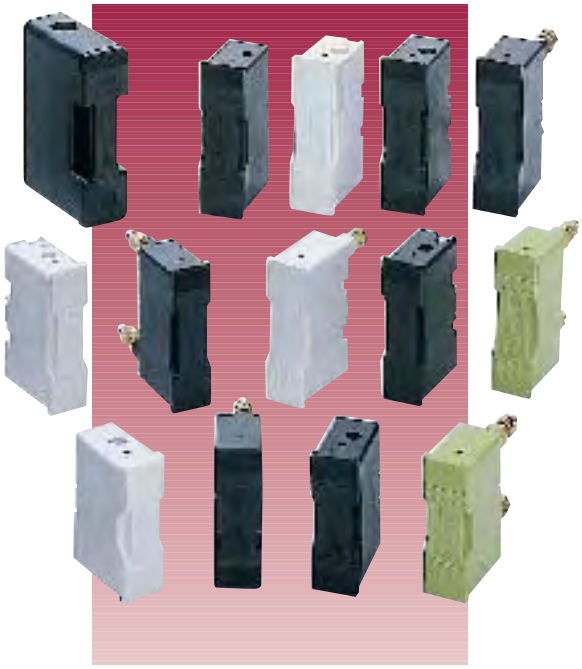

Fuse Holders: SAFECLIP

BS 88-1 and 6:1988
IEC 269-1

- *Total safety*
- *Complete*
- *Important time-saving features*
- *High quality*
- *Great design*

Applications

Approvals

ASTA Certified

Application Notes

Protection of personnel
SAFECLIP Fuse Holders are fully shrouded for personnel safety and complete compliance with the direct contact electric shock requirements of the IEE Wiring Regulations (BS 7671:1992).

Associated Fusegear Equipment

- **SAFECLIP Fusebanks**
- **SAFECLIP Fuseboards**

Associated Fuse Links

- **SAFECLIP**
- **Contact the sales office for catalogues**

Technical Data

Current Rating	(A)	20-125
Voltage Rating ac	(V)	up to 550
Breaking Capacity ac	(kA)	80
Max Operating Ambient Temperature	(°C)	40
Cable Connector Size	(mm^2)	16-70

Performance

ASTA type test certified to BS 88: Parts 1 and 6 suitable for use on applications up to 550Vac.

Features

Fully shrouded for personal safety
Separate base contact insulating shrouds ensure that no 'live' metal is dangerously exposed when the fuse carrier is removed – this enables an out-going circuit to be cabled with complete safety to personnel and with continuity of supply to other circuits.

Most comprehensive range
- 20, 32, 63, 100 and 125 Amp ratings
- front, back stud and half front/back stud connection variants
- also available busbar/front connection in 20, 32 and 63 Amp
- standard black finish, available colours include white, green and grey.

Ease of installation
- unique clip-action terminal shrouds
- integral DIN-rail mounting feature on 32, 63 and 125 Amp
- accommodates the clip-in SAFECLIP HRC Fuse Link
- provides economies in cost, size and installation time.

High resistance material
Strength and long life assured in fuse carriers moulded from tough, flame retardant material.

Time proven contact system
Lower contact resistance and watts loss achieved by self-cleaning, self-aligning base contacts with stainless steel contact reinforcing stirrups.

SAFECLIP – 20 Amp



	Part number	Code	Colour	Maximum cable size	Fuse Link accommodated
Front connected	SC20H	402246	Black	16mm²	SS
	SC20HWH	402249	White	16mm²	SS
	SC20HGN	402248	Green	16mm²	SS



Back stud connected	SC20P	402250	Black	16mm²	SS
	SC20PWH	402252	White	16mm²	SS
	SC20PGN	402251	Green	16mm²	SS



Busbar / Front connected	SC20BH	402245	Black	16mm²	SS

SAFECLIP – 32 Amp



	Part number	Code	Colour	Maximum cable size	Fuse Link accommodated
Front connected	SC32H-D	402254	Black	16mm²	NS
	SC32H-DWH	402256	White	16mm²	NS
	SC32H-DGN	402255	Green	16mm²	NS



Back stud connected	SC32P	402258	Black	16mm²	NS
	SC32PWH	402260	White	16mm²	NS
	SC32PGN	402259	Green	16mm²	NS



Busbar / Front connected	SC32BH	402253	Black	16mm²	NS
Front / Back stud connected	SC32PH-D	402261	Black	16mm²	NS
	SC32PH-DWH	402262	White	16mm²	NS

SAFECLIP – 63 Amp

	Part number	Code	Colour	Maximum cable size	Fuse Link accommodated
 Front connected	SC63H-D	402265	Black	25mm²	ES
	SC63H-DWH	402266	White	25mm²	ES
 Back stud connected	SC63P	402268	Black	25mm²	ES
 Busbar / Front connected	SC63BH	402263	Black	25mm²	ES

SAFECLIP – 100 Amp

	Part number	Code	Colour	Maximum cable size	Fuse Link accommodated
 Front connected	SC100H	402243	Black	50mm²	OS

SAFECLIP – 125 Amp

	Part number	Code	Colour	Maximum cable size	Fuse Link accommodated
 Front connected	SC125H-D	402244	Black	70mm²	XS

Accessories – SAFECLIP Copper Links



Part number	Code	Current rating	For use in
SSC-LINK	402271	20 Amp	SC20
NSC-LINK	402241	32 Amp	SC32
ESC-LINK	402240	63 Amp	SC63
OSC-LINK	402242	100 Amp	SC100
XSC-LINK	402272	125 Amp	SC125

Accessories – SAFECLIP Padlockable Inserts



Part number	Code	For use in	Suitable padlocks (not supplied)
SC32LOCK	402257	SC32	YALE (P72) and SQUIRE (LP6. LN1 or No 20)
SC63LOCK	402267	SC63	

Accessories – SAFECLIP Adaptor Carrier



Part number	Code	For use with Fuse Link type	For use in
SCA63CAR	402269	NS	SC63

Accessories – SAFECLIP Sealing Band





Part number	Code	For use with
SCSB20/32	402270	SC20 and SC32

Accessories – SAFECLIP DIN-rail Adaptor

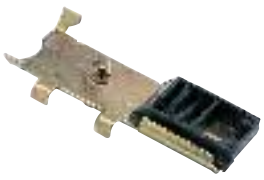



Part number	Code	For use with
DIN-20/32	402238	SC20 and RS20

Note : SC32H-D, SC63H-D and SC125H-D have an integral DIN-rail feature as standard.

Fuse Link Selection

HRC Fuse Links Accommodated – Selection Chart

Fuse Holder Rating	SAFECLIP HRC Fuse Links rated up to 440 Volt ac	Extended range of SAFECLIP for motor circuit protection		
			Current rating	Rating for Motor Starting
Amp	Part number	Part number	Amp	Amp
20	SS 2 – 20			
32	NS 2 – 32	NS32M40	32	40
63	ES 40 – 63 NS 2 – 32 *	ES63M80	63	80
100	OS 80 & 100 TIS 35 – 63 TIA 2 – 32	OS100M125 OS100M160	100 100	125 160
125	XS 2 – 125			

* adaptor carrier required Part number SCA63CAR

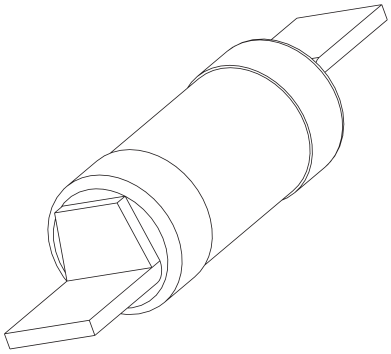

Outline Dimensions

SAFECLIP Fuse Holders – 20 Amp front connected

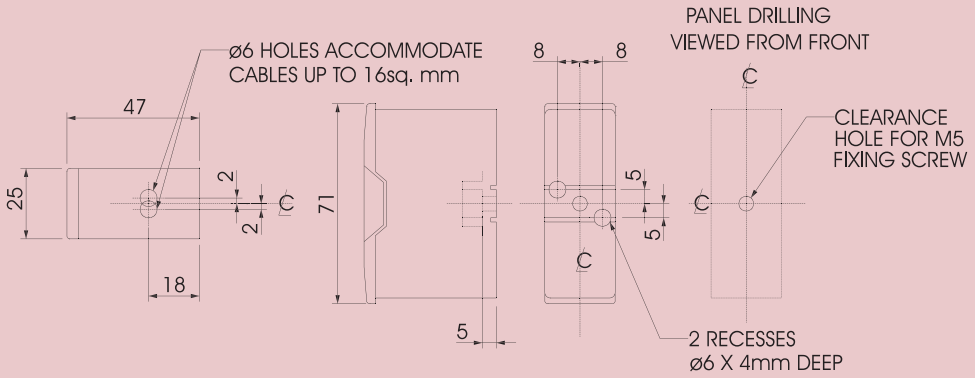

SAFECLIP Fuse Holders – 20 Amp back stud connected

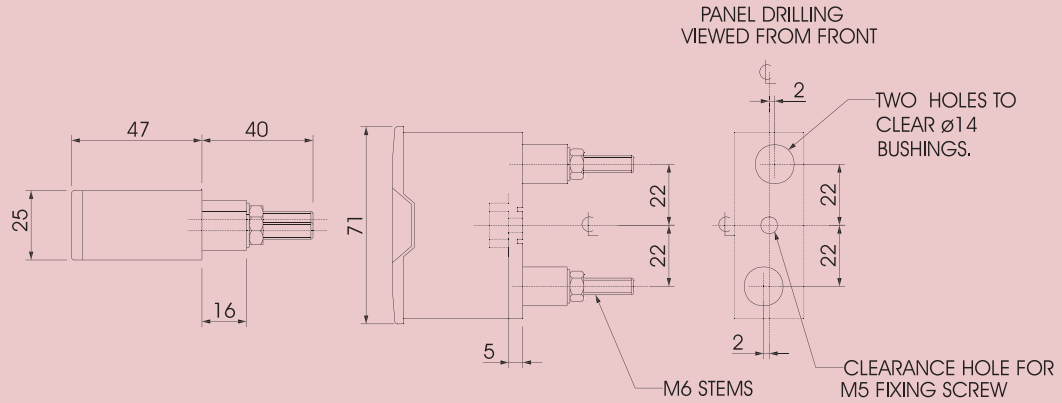

SAFECLIP Fuse Holders – 20 Amp busbar / front connected

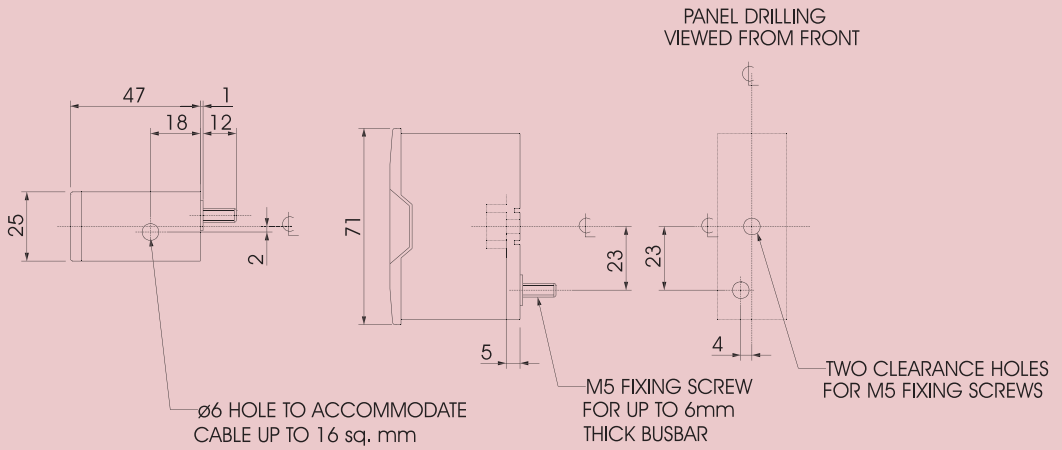

SAFECLIP Fuse Holders – 32 Amp front connected

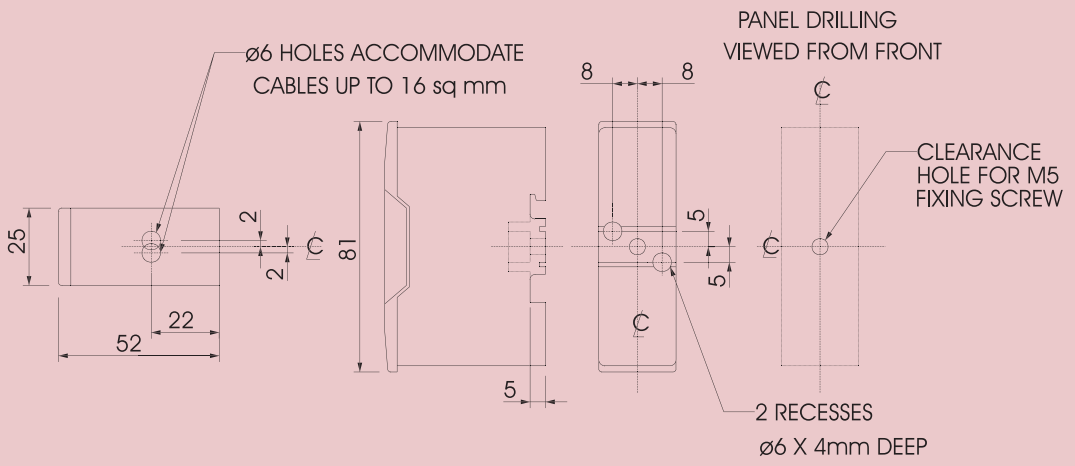

SAFECLIP Fuse Holders – 32 Amp back stud connected

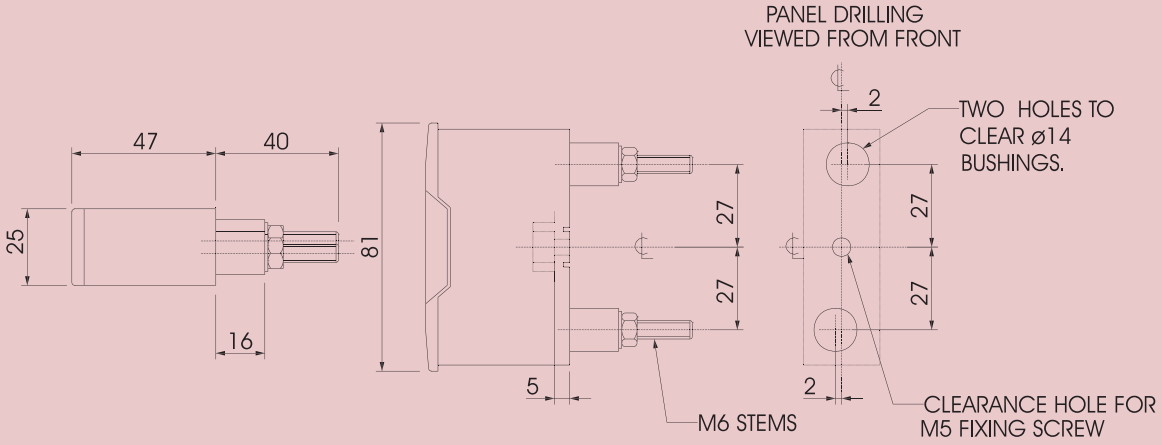

SAFECLIP Fuse Holders – 32 Amp busbar / front connected

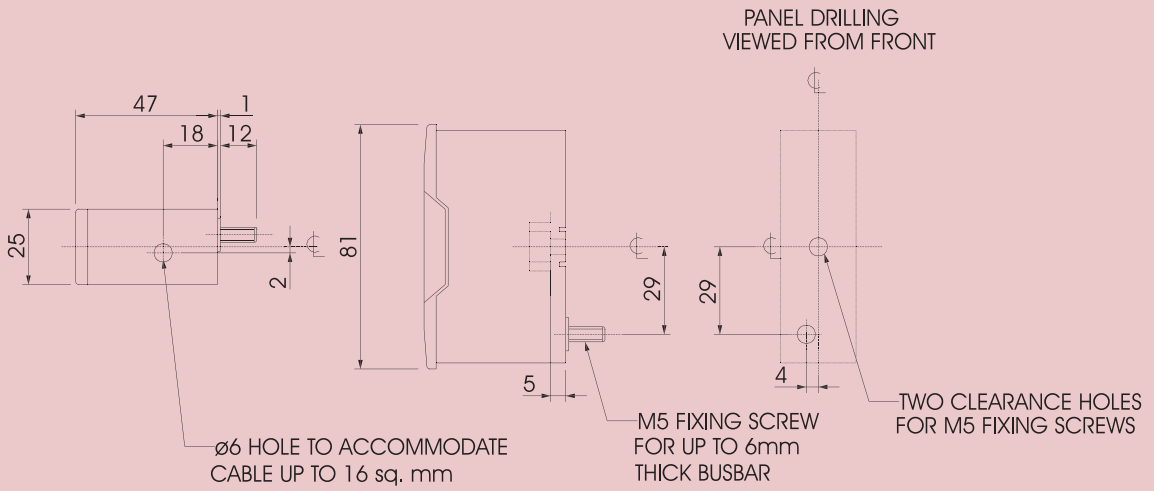

SAFECLIP Fuse Holders – 32 Amp front / back stud connected

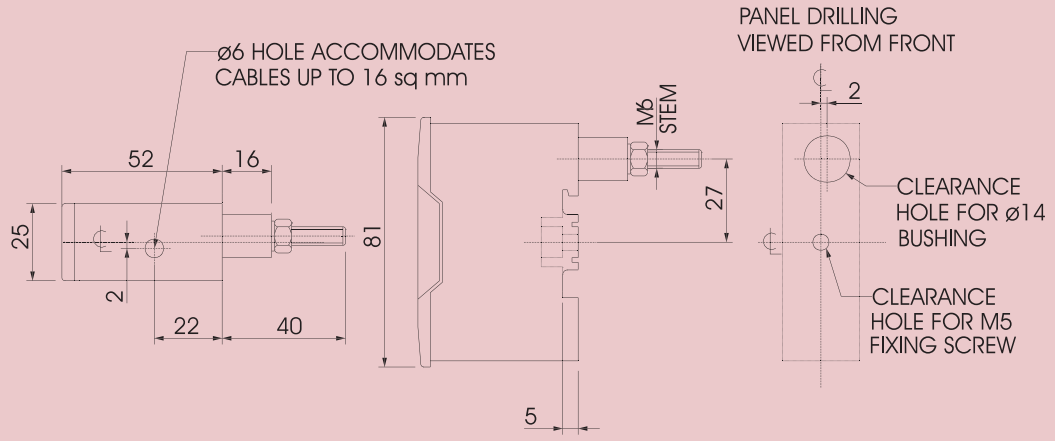

SAFECLIP Fuse Holders – 63 Amp front connected

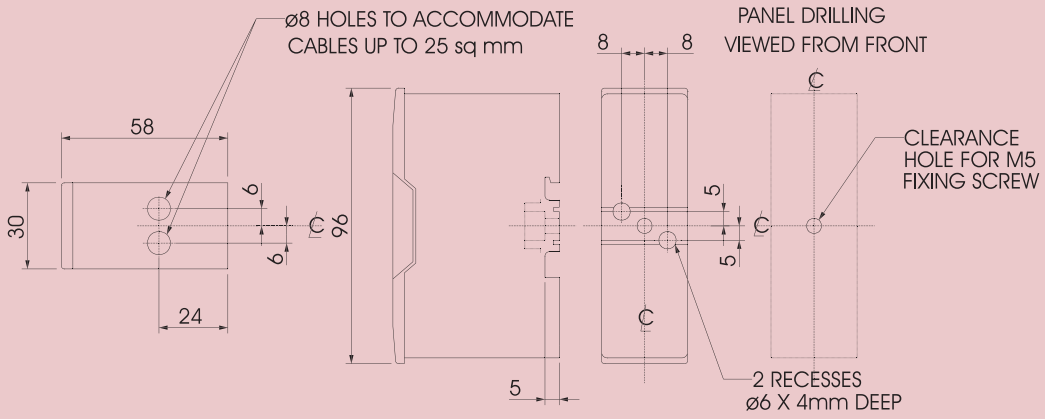

SAFECLIP Fuse Holders – 63 Amp back stud connected

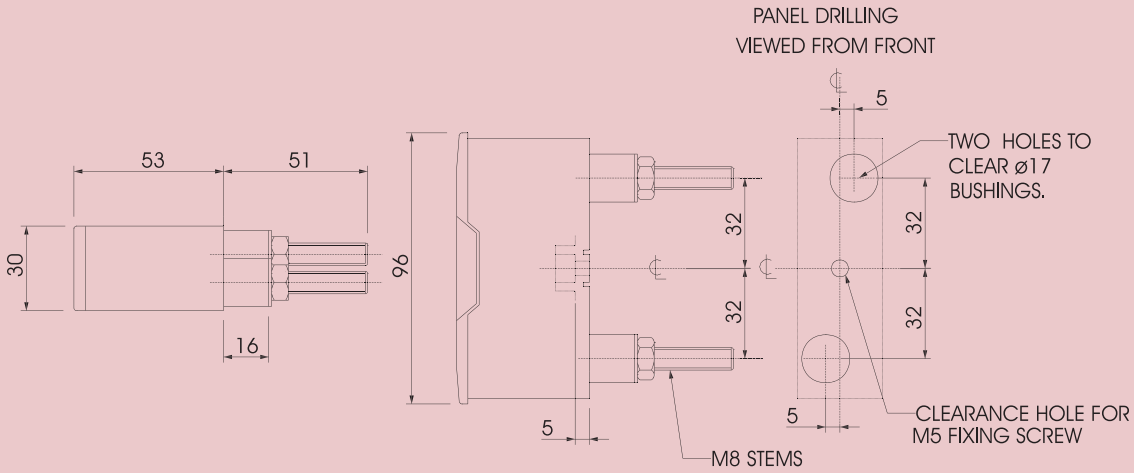

SAFECLIP Fuse Holders – 63 Amp busbar / front connected

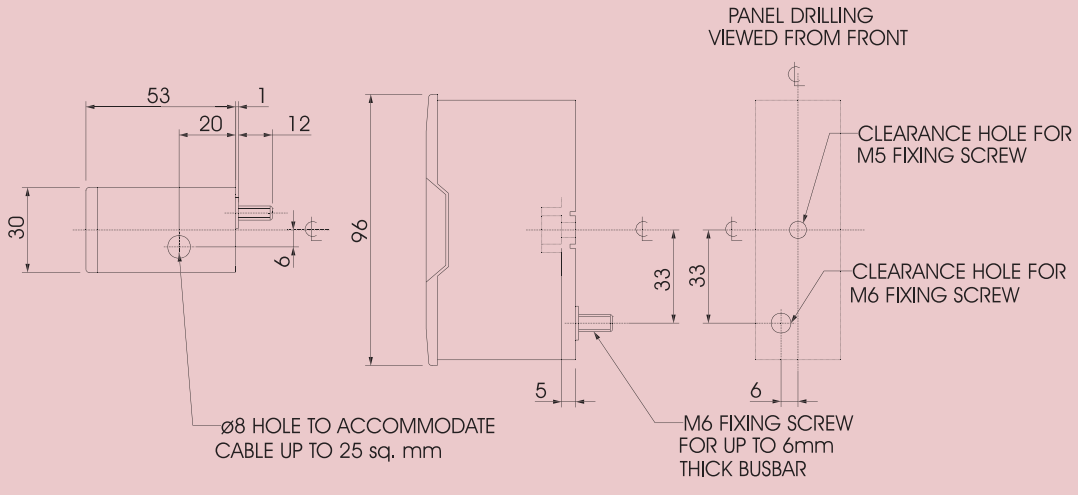

SAFECLIP Fuse Holders – 100 Amp front connected

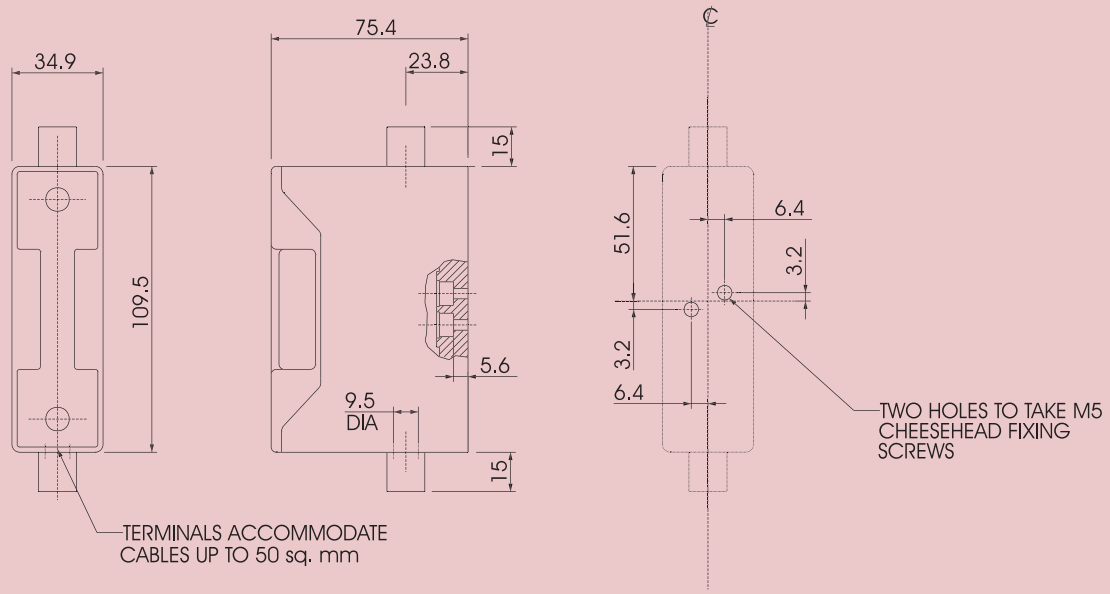

SAFECLIP Fuse Holders – 125 Amp front connected

