HAUBER
ELEKTRONIK









Vibration Monitoring Unit
Series HE101

MADE IN GERMANY

- Vibration speed (mm/s, rms)
- ATEX / IECEx / UKEx / EACEx Zone 1 / 2 / 21 / 22
- Temperature (°C)
- Analogue current output: 4–20 mA
- Frequency range: 10 Hz – 1000 Hz
  1 Hz – 1000 Hz

Date of manufacture:	_____
Type description:	_____
Serial no.:	_____

Operating instructions

Vibration Monitoring Unit
Type HE101

Standard and ATEX / IECEx / UKEx / EACEx

Version: 2023-01-27

Attention!
Prior to commissioning the product, the instruction manual must be read and understood.

All rights reserved, including rights to translation.
Subject to modifications.

Please contact the company with any questions:
HAUBER-Elektronik GmbH
Fabrikstraße 6
D-72622 Nürtingen
Germany
Tel.: +49 (0) 7022 / 21750-0
Fax: +49 (0) 7022 / 21750-50
info@hauber-elektronik.de
www.hauber-elektronik.de

1 Contents

1 Contents 3
2 Safety information 4
3 Scope of this instruction manual 4
4 Vibration Monitoring Unit Type HE101 5
5 Intended Use 5
6 Scope of supply 5
7 Documents and Certificates 5
8 Transfer of liability when operating in potentially explosive atmospheres 6
9 Fields of application and example labels 7
10 Conditions for safe operation in potentially explosive atmospheres 8
10.1 HE101.01 (ignition protection class "pressure-resistant casing") 8
10.2 HE101.03 cULus Hazloc DIV2 8
11 Technical data 10
11.1 General data 10
11.2 Electrical data 10
11.3 Operating range of the vibration monitoring unit 11
11.4 Typical frequency response 12
11.5 Mechanical data 13
11.6 Housing dimensions 13
11.7 Properties of the integrated cable 14
12 Connection 15
13 Assembly and disassembly 16
13.1 General notes 16
13.2 Fixing the vibration monitoring unit to the mounting surface 16
14 Installation and commissioning 17
14.1 General notes 17
14.2 Wiring diagram 17
15 Maintenance and repair 19
15.1 General notes 19
15.2 Troubleshooting Table 19
16 Transport, storage and disposal 20
17 Accessories 20
18 Coding Type HE101 21
19 EU and UK Declaration of Conformity 22

2 Safety information

2.1 General

The safety instructions are intended to protect people and property from damage and hazards that could arise as the result of improper use, incorrect operation or other misuse or devices, especially in explosive areas. Therefore, please read the operating instructions carefully before working on the product or operating it. The operating instructions must be accessible to operating personnel at all times.

Please make sure that all documents are present and complete before commissioning or performing other work on the product. If the documents have not all been delivered in full or if further copies are necessary, they can also be obtained in other languages.

The product is built according to the latest state of the art. However, hazards to people, machinery and systems can still arise as the result of improper handling, unintended use or operation and maintenance by persons inadequately trained on the product.

All those who are involved in the installation, operation and maintenance of the product in the operator's plant must read and understand the operating instructions.

The product may only be assembled, disassembled, installed and repaired by instructed, sufficiently trained and authorised personnel.

2.2 Symbols used



This symbol indicates an explosion hazard.



This symbol indicates a hazard from electrical current.



This symbol indicates information unrelated to safety.

3 Scope of this instruction manual

This instruction manual for the HE101-type vibration monitoring unit applies to the following variants:
Standard / ATEX / IECEx / UKEx / EACEx

The variants are functionally identical. The ATEX / IECEx / UKEx / EACEx variants also possess certifications and labels which permit use in potentially explosive atmospheres. For further information, see chapter "Fields of application" on page 7.

4 Vibration Monitoring Unit Type HE101

The HE101-type vibration monitoring unit is used to measure and monitor absolute bearing vibrations and temperatures in machines in line with the standard DIN ISO 10816.
It offers the following features:

- Measurement parameter: The effective value (rms) of the vibration speed in mm/s, in accordance with DIN ISO 2954.
- Measurement parameter: The temperature in °C
- Two analogue current outputs: Interference-free DC signal from 4-20 mA, proportional to the measuring range of the monitoring unit.
- A break on the monitoring cable can be detected by the subsequent evaluation device: DC signal value < 3.5 mA.

5 Intended Use

The HE101-type is used exclusively for measuring mechanical vibrations and temperatures in machines and mechanical systems. It may only be used in accordance with the specifications listed in the data sheet. **Main fields of application**: Fans, ventilators, blowers, electric motors, pumps, centrifuges, separators, generators, turbines and similar oscillating mechanical equipment.

6 Scope of supply

All versions include:

- Vibration monitoring
- Operating instructions

7 Documents and Certificates

You can find the following documents and certificates for HE101 type at *www.hauber-elektronik.de* where they can be viewed and downloaded:

- EU type examination certificate ATEX, no.: PTZ 16 ATEX 0029 X Rev 3
- UKEx certificate number: UL22UKEX2481X
- IECEx certificate of conformity, no.: PTZ 18.0009 X Rev 2
- UL certificate of conformity, no.: E507077-20191126
- UL Haz Loc Certificate of Conformity & Control Drawing M003-HE100
- CCC certificate for mandatory product certification for China
- Kosha certificate
- EACEx certificate RU C-DE.HA65.B.00053/19
- EAC Declaration

8 Transfer of liability when operating in potentially explosive atmospheres

The owner of the system is exclusively liable for the appropriate configuration of the electrical connections with respect to explosion protection regulations and correct commissioning.

If the system is installed by a sub-contractor on behalf of the owner, the system may only be commissioned after the sub-contractor has issued written confirmation in the form of a certificate of installation that the system has been installed correctly and professionally in accordance with the applicable legal regulations.

The operator is obliged to notify the responsible authorities of the initial commissioning of explosion-protected systems or system components and their re-commissioning following extensive changes or maintenance.

9 Fields of application and example labels

	HE101.00	HE101.01	HE101.03
Version	**Standard CE / IEC / EAC UL Proc. Cont. Eq. Ord. Loc.**	**ATEX / IECEx / UKEx / EACEx Pressure-resistant casing Ex db Protection through housing Ex tb**	**UL Proc. Cont. Eq. Haz. Loc. Division 2**
Fields of application	Atmospheres not at risk of explosion	Potentially explosive atmospheres of zones 1 and 21 2 and 22	Potentially explosive atmospheres according to UL Division 2
Marking	c UL us LISTED E507077 Process Control Equipment for Ordinary Location	Ex II 2G Ex db IIC T4 Gb II 2D Ex tb IIIC T120 °C Db -40 °C ≤ T_{Amb} ≤+60°C PTZ 16 ATEX 0029 X Rev 3 **IECEx** Ex db IIC T4 Gb Ex tb IIIC T120 °C Db -40 °C ≤ T_{Amb} ≤+60°C IECEx PTZ 18.0009 X Rev 2 UKCA II 2G Ex db IIC T4 Gb II 2D Ex tb IIIC T120 °C Db -40 °C ≤ T_{Amb} ≤+60°C UL22UKEX2481X EAC Ex 1Ex db IIC T4 X Ex tb IIIC T120 °C X -40 °C ≤ T_{Amb} ≤+60°C № TP TC 012/2011	c UL us LISTED Class I, Division 2, Groups A, B, C and D, T4 Class II, Division 2, Groups F and G, T4 E516625 Process Control Equipment for Hazardous Location
Type plate	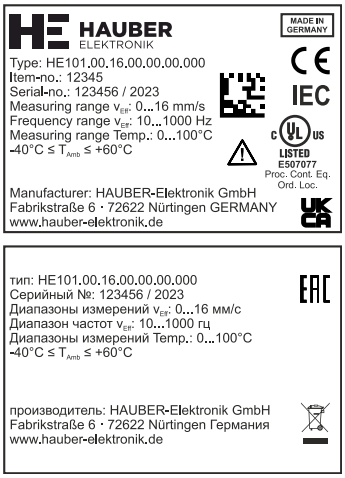		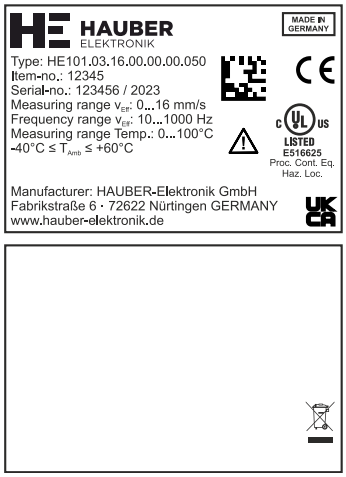

Standards applied

You can find a list of standards, including the related issue dates, in the EU type examination certificate for the vibration monitoring unit.

10 Conditions for safe operation in potentially explosive atmospheres

The following conditions must be met for safe operation in a potentially explosive atmosphere.

10.1 HE101.01 (ignition protection class "pressure-resistant casing")

Electrical data

		min.	**typ.**	**max.**
Supply voltage	U_n	10 V DC	24 V DC	30 V DC
Current consumption	I_n	4 mA	4 – 20 mA	25 mA

Tab. 1: Electrical data HE101.01

10.2 HE101.03 cULus Hazloc DIV2



The version for DIV2 may not be operated without the safety clip to guard against accidental disconnection of the plug connection! If operated in a potentially explosive atmosphere, there is otherwise an explosion hazard, due to spark formation!



For use in DIV2, the supply voltage may not exceed 28.1 V DC. This must be ensured through the use of an appropriate power supply unit.

Attaching the safety clip

1. Insert the connecting cable socket into the M12 connector as far as it will go (mind the position of the code cam).
2. Tighten the knurled rotating ring of the socket by hand.
3. Attach the safety clip to guard against accidental disconnection of the plug connection.
   - Place both shell halves of the clip around the plug connection.
   - Press both shell halves firmly together with your hands until the lock snaps into place.
   - Place the arrow connected to the two shell halves around the cable and pull it through the eyelet at the other end so that the notice "DO NOT DISCONNECT UNDER VOLTAGE" can be read alongside the cable.

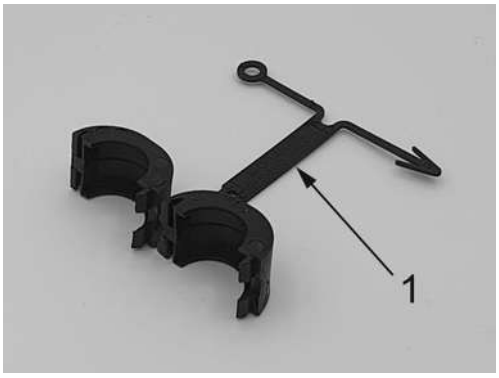

Fig. 1: Safety clip



Fig. 2: Attached safety clip

1 Notice tag

Attaching the protection cap

After disconnecting the plug, the protection cap must be attached to the M12 plug!
Detach the safety clip and attach the protection cap.

1. Disconnect voltage.
2. Pry apart both shell halves of the sleeve with a screwdriver.
3. Close off the M12 plug well with the protection cap.



Fig. 3: Protection cap



Fig. 4: Attached protection cap

Control drawing

Please also note the control drawing HE101-M003.

Electrical data

Max. input voltage of the vibration monitoring unit	$V_{i\text{-}max}$	28.1 V DC
Max. input current of the vibration monitoring unit	$I_{i\text{-}max}$	25 mA / 50 mA (only HE101)

Tab. 2: Electrical data HE101.03

11 Technical data

11.1 General data

Each sensor has one of the listed measuring and frequency ranges. Further ranges on request.
Please indicate the measuring and frequency range in your request.

Measuring range:	0 – 8 mm/s (for frequency range > 10 Hz only) 0 – 16 mm/s 0 – 32 mm/s 0 – 64 mm/s Other measuring ranges See also Coding Type HE101, page 21.
Temperature measuring range	0…+100 °C
Measuring accuracy:	±10 % (according to DIN ISO 2954)
Transverse sensitivity:	< 5%
Frequency range:	10 Hz–1,000 Hz (standard) 1 Hz–1000 Hz
Calibration point	159.2 Hz and 90% amplitude of measuring range
Maximum acceleration	±16.5 g
Lifetime	10 years
MTTF value	399 years
Permissible temperature ranges	-40 °C – +60 °C (ambient temperature) -40 °C – +125 °C (measuring head temperature)

Tab. 3: General data

11.2 Electrical data

Output signal:	2x 4 – 20 mA (proportional to the measuring range)
Power supply:	10 – 30 V DC
Power input (max.):	50 mA
Load/output load (max.):	500 Ω
Fuse *	30VDC, 3A, medium blow
* Ensure that the supply line is protected by a UL-approved fuse for UL-compliant sensor operation.	

Tab. 4: Electrical data

11.3 Operating range of the vibration monitoring unit

The operating range is independent from the measuring range. It can be derived from the maximum acceleration, which is 16.5 g across all frequencies. The maximum measurable vibration velocity is based on the formula

$$v_{max} = \int a_{max}$$

For sinusoidal vibration, $v_{max} = \frac{a_{max}}{2\pi f}$ applies

Fig. 5: shows the operating range of the vibration monitoring unit, which is limited by the maximum measurable vibration velocity in mm/s depending on the frequency in Hz.

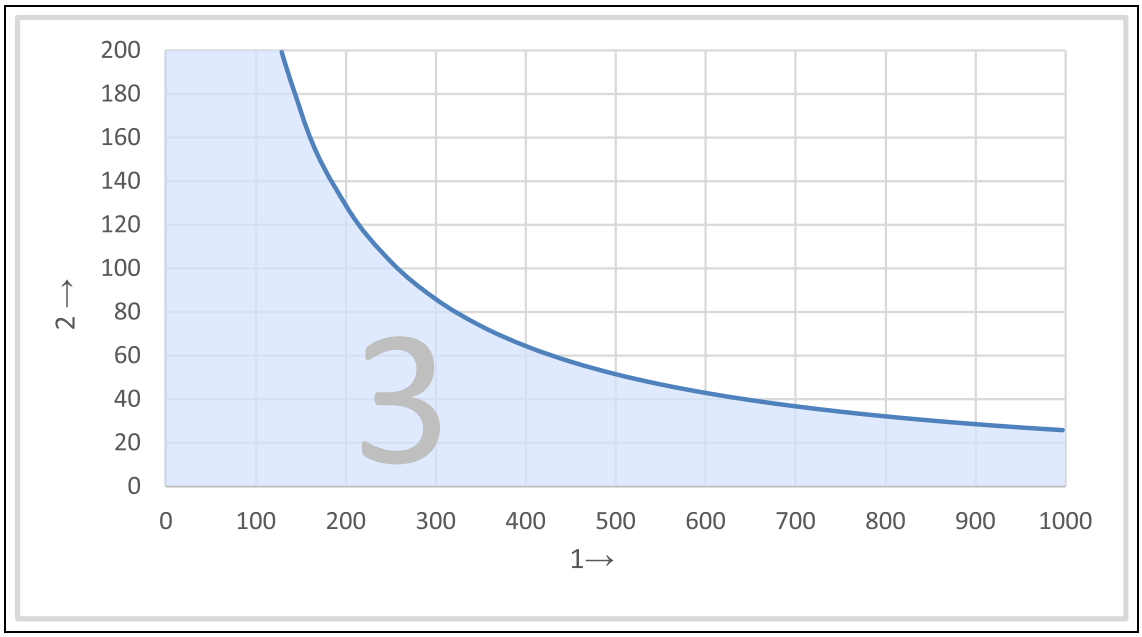

Fig. 5: Operating range diagram

1 Frequency in Hz
2 Vibration velocity in mm/s
3 Operating range of the vibration monitoring unit

Reading example:

Frequency (Hz)	**Maximum measurable vibration speed (mm/s)**
250	103
400	64
1000	25

Tab. 5: Reading example of operating range

11.4 Typical frequency response

10 Hz–1,000 Hz (standard)

The frequency response is recorded using a reference sensor.

• 4 Hz. . . 1200 Hz acceleration sensor

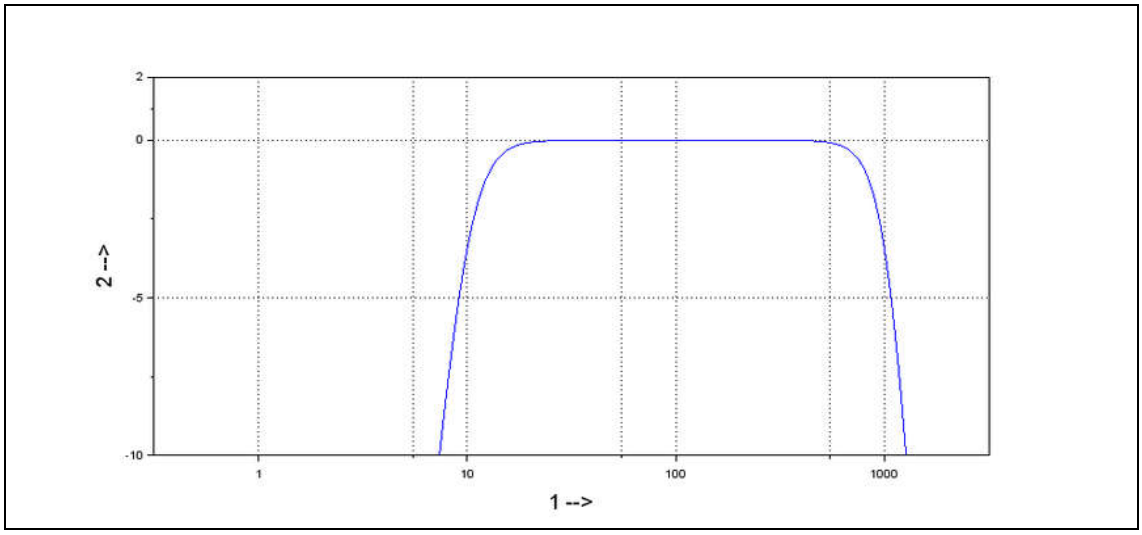

Fig. 6: Typical frequency response 10 Hz–1000 Hz

1 Frequency in Hz

2 Amplification in dB

1 Hz–1000 Hz

The frequency response is recorded using two reference sensors.

• 1 Hz. . . 10 Hz laser sensor

• 10 Hz. . . 1200 Hz acceleration sensor

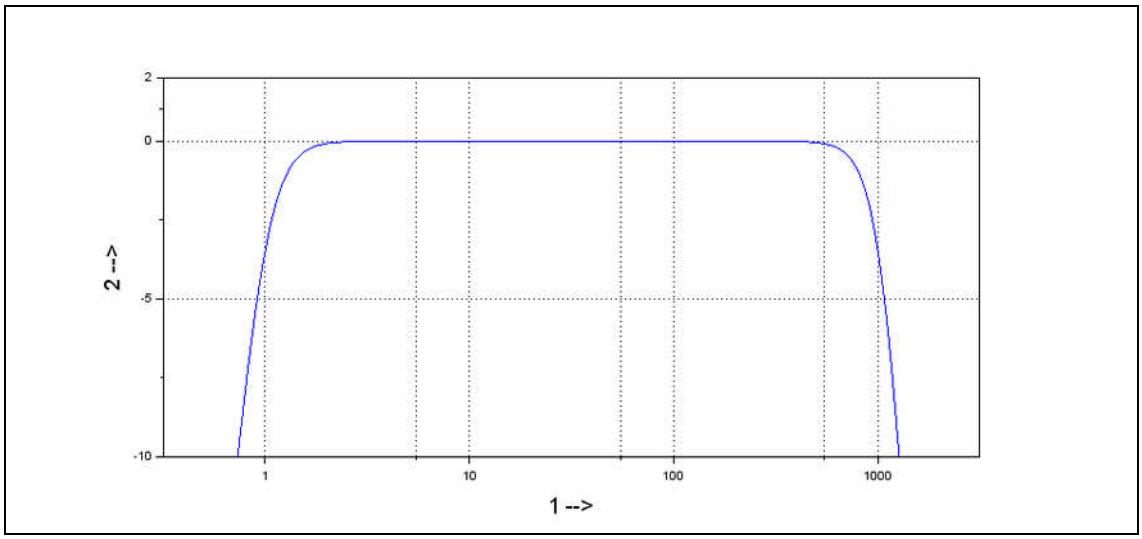

Fig. 7: Typical frequency response 1 Hz–1000 Hz

1 Frequency in Hz

2 Amplification in dB

11.5 Mechanical data

Additional materials and fixings can be found in section "Coding Type HE101" on page 21.

Housing material:	Stainless steel V2A, material no.: 1.4305 (standard)
Fastening:	Width across flats 24 (hexagonal) M8 x 8 mm Pitch: 1.25 mm (standard)
Installation type:	standing/vertical or lying/horizontal
Measuring direction:	Along the fastening axis
Tightening torque sensor	8 Nm
Max. torque of the M12 union nut on the connector	0.4 Nm
Weight:	approx. 200 g
Protection class:	IP 66/67 (when connected)

Tab. 6: Mechanical data

11.6 Housing dimensions

11.6.1 Version: Standard

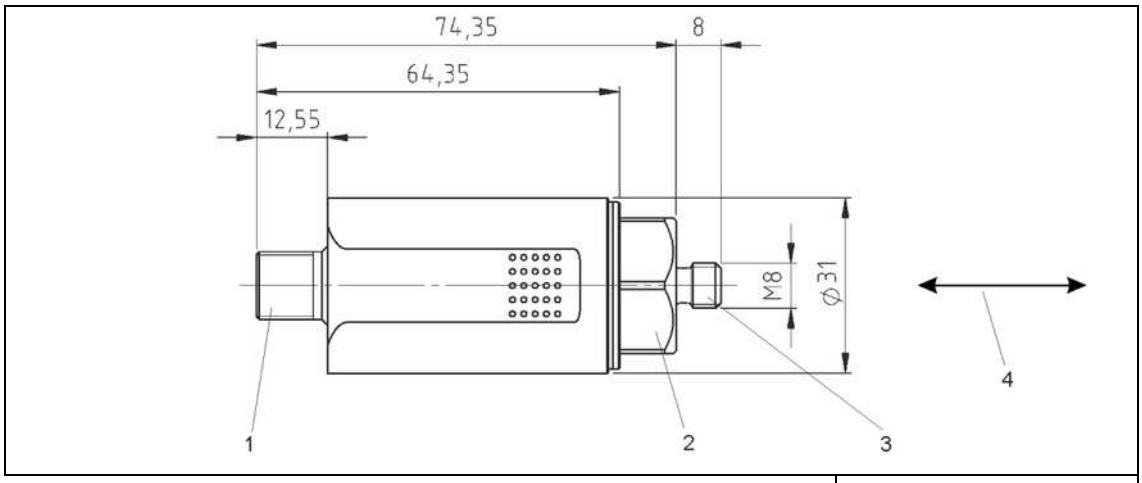

Fig. 8: Housing with M12 connector

All measurements in mm

1 M12 connector
2 Width A/F 24
3 Fixing
4 Measuring direction along the fixing axis

11.6.2 Version: ATEX / IECEx / UKEx / EACEx Ex d

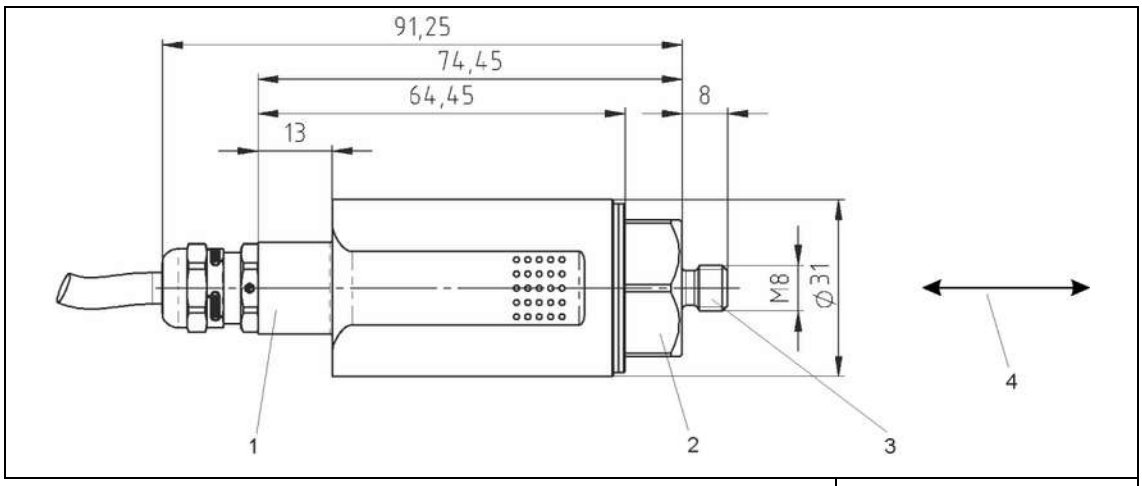

Fig. 9: Housing with integrated cable

All measurements in mm

1 Cable gland for integrated cable
2 Width A/F 24
3 Fixing
4 Measuring direction along the fixing axis

11.7 Properties of the integrated cable

Cable type	12YC11Y 4x03.4 mm²
Conductor material	El-Cu stranded wire
Conductor insulation	TPEE E (12Y)
Coating	PUR
Coating diameter	6.0 ± 0.2 mm
Temperature range	-40 °C – +80 °C fixed -30 °C – +80 °C moving
Minimum bending radius	30 mm fixed 60 mm moving
Flame resistant	Yes, according to UL 1582 Sec. 1061
Halogen-free	Yes

Tab. 7: Technical data of the integrated cable

12 Connection

Version:	Standard

Connector, M12, 4-pin

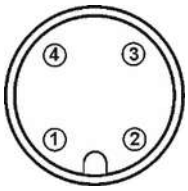

Pin 1:	GND
Pin 2:	10 – 30 V DC
Pin 3:	4 – 20 mA/mm/s
Pin 4:	4 – 20 mA/°C

Version:	ATEX / IECEx / UKEx / EACEx pressure-resistant casing Ex d ATEX / IECEx / UKEx / EACEx protection through housing Ex tb

Integrated cable

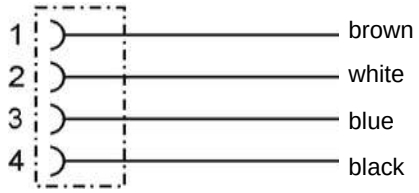

Pin 1:	GND
Pin 2:	10 – 30 V DC
Pin 3:	4 – 20 mA (mm/s)
Pin 4:	4 – 20 mA (°C)

PUR sheathed cable, Ø: approx 6.5 mm, 4-pin, 0,34 mm²

13 Assembly and disassembly

13.1 General notes

Assembly and disassembly work on and with the vibration monitoring unit may only be performed by an authorised specialist familiar with the safety regulations governing handling electrical components!



The housing of the vibration monitoring unit must be earthed via the fixing – through the machine earth of the mounting surface or through a separate protective conductor (PE)!

13.2 Fixing the vibration monitoring unit to the mounting surface

13.2.1 Prerequisites

- Mounting surface is clean and flat, i.e. free of paint, rust, etc.
- Measuring head area of the vibration monitoring unit must lie flat on the mounting surface.

13.2.2 Tool

- Hex key, width A/F 24

13.2.3 Work steps and instructions

- Screw vibration monitoring unit into the threaded hole of the mounting surface in a friction-locked manner using a hex key. The tightening torque should be 8 Nm.
- The tightening torque of the M12 union nut of the plug connection must not exceed 0.4 Nm.



To obtain precise measurement values, the vibration monitoring unit must be fixed to the mounting surface in a friction-locked manner!



Auxiliary structures for fixing are to be avoided! If unavoidable, make them as firm as possible!



Earth/ground loops are amongst the most common problems in measurement set-ups with sensitive sensor technology. These issues arise due to unintentional differences in potential in the electrical circuit between the sensor and evaluation unit. As a countermeasure, we recommend our standard earthing concept or, depending on the application, our Alternative earthing concept



Ensure that the earth connection is electrically secure.

14 Installation and commissioning

14.1 General notes

Installation and commissioning of the vibration monitoring unit must be performed by an authorised specialist who is familiar with the safety regulations when handling electrical components.

Protect the connection cable and any extension cable from electrical interference and mechanical damage! Local regulations and instructions must be observed in doing so!

14.2 Wiring diagram

Earth/ground loops are amongst the most common problems in measurement set-ups with sensitive sensor technology. These issues arise due to unintentional differences in potential in the electrical circuit between the sensor and evaluation unit.

Ensure that the earth connection is electrically secure.

14.2.1 Standard earthing concept

With the standard earthing concept, the sensor cable shield has no connection to the sensor housing. The sensor housing has the same potential as the machine earth.

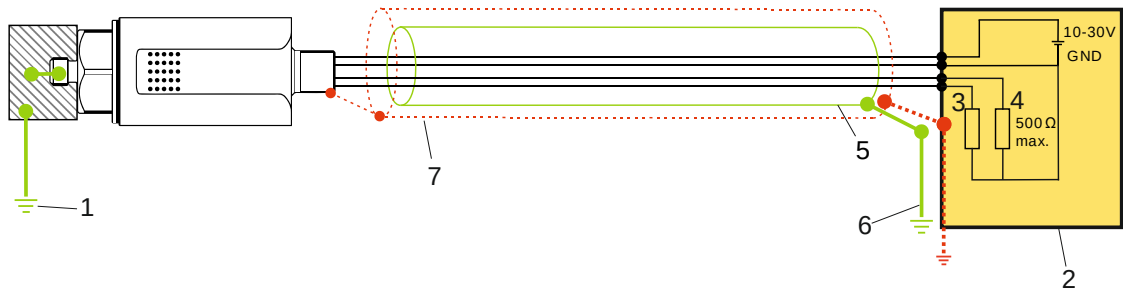

Fig. 10: Standard earthing concept

1 Machine earth
2 Evaluation unit (measuring instrument, SPS, …)
3 Blue – 4 – 20 mA current signal (vibration speed)
4 Black – 4 – 20 mA current signal (temperature)
5 Cable shield
6 Evaluation unit for earth potential
7 Optional flexible metal tubing (available for version with integrated cable only)

14.2.2 Alternative earthing concept

With the alternative earthing concept, the sensor cable shield has a connection to the sensor housing. The sensor housing uncoupled from the machine earth by means of an EMC adapter (red). With the alternative earthing concept an electrically secure earth connection is only ensured for versions with an M12 connector. For variants with an integrated cable, the alternative earthing concept cannot be used.

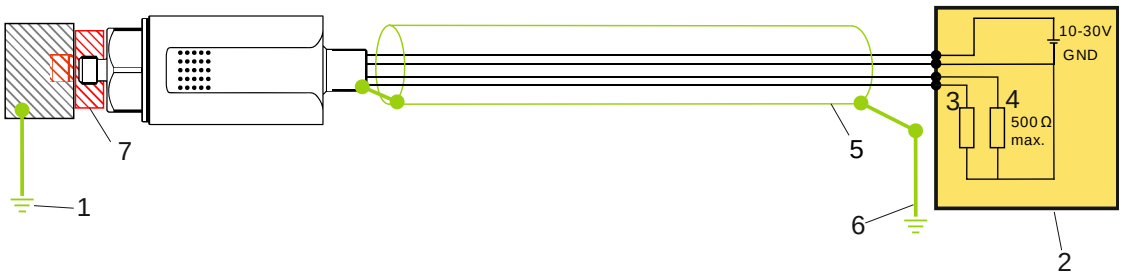

Fig. 11: Alternative earthing concept

1 Machine earth
2 Evaluation unit (measuring instrument, SPS, …)
3 Blue – 4 – 20 mA current signal (vibration speed)
4 Black – 4 – 20 mA current signal (temperature)
5 Cable shield
6 Evaluation unit for earth potential
7 EMC adapter (Hauber item no. 10473)

In your request, please notify us if you would like to use the alternative earthing concept. We will then provide you with the appropriate sensor cable and the EMC adapter.

15 Maintenance and repair

15.1 General notes



Repair and cleaning work on vibration monitoring units may only be performed by an authorised specialist familiar with the safety regulations governing handling electrical components.



Immediately replace defective connection cables!
A defective vibration monitoring unit must be completely replaced!



The vibration monitoring unit HE101 is maintenance-free!

15.2 Troubleshooting Table

Fault	Cause	Action
No measured value (4-20 mA)	No power supply	Check power source and/or supply
	Discontinuity in connecting cable	Replace connecting cable
	Fuse defective	Replace fuse
	Connection has incorrect polarity	Connection of correct pole
	Vibration monitoring unit faulty	Vibration Monitoring Unit replace
Incorrect Reading	Vibration monitoring unit not mounted in a friction-locked manner	Mount vibration monitoring unit in a friction-locked manner
	Vibration monitoring unit installed in wrong place	Install vibration monitoring unit in correct place
EMC problems		For further information, see chapter "Alternative earthing concept" on page 18.

Tab. 8: Troubleshooting Table

16 Transport, storage and disposal

The sensor must be protected from damaging environmental factors and mechanical damage during transport with the use of adequate packing.

The sensor may not be stored in ambient temperatures outside the permitted operating temperature.

The product contains electronic components and must be disposed of properly in accordance with local laws and regulations.

17 Accessories

Accessories	Standard (HE101.00…)	Ex d, tb (HE101.01…)	UL Div 2 (HE101.03…)
Factory calibration certificate – art. no.: 10419	x	x	x
Evaluation device types 652 and 656	x	x	
HE400-type portable measuring instrument	x		
Magnetic foot – art. no.: 10054	x		x
Various mounting adapters; e.g. M8 -> M10	x	x	x
Configurable mating plug	x	x	x
Connection cable, socket M12, 4-pin, 0.34 mm², L= 2 m, 5 m, 10 m or customised	x		x
Rubber protective nozzle without HE logo – art. no.: 11027; with HE logo – art. no.: 10986	x	x	x
Flexible metal tubing	x	x	x
EMC adapter – art. no.: 10473	x		x

For use OUTDOORS or using SPRAY WATER, the vibration monitoring unit should have the rubber nozzle pulled over it for additional protection.



Rubber protective nozzle

18 Coding Type HE101

HE101.	00.	16.	01.	00.	00.	000

HE series

101 = transmitter 4 – 20 mA ~ mm/s rms
+ temp. 4 – 20 mA ~ 0 – 100 °C

ATEX / IECEx / UKEx / EACEx

00 = no ATEX / IECEx / UKEx / EACEx
01 = ATEX / IECEx / UKEx / EACEx Ex d and Ex tb (Zone 1 / 2 / 21 / 22)
03 = UL Proc. Cont. Eq. Haz. Loc. Division 2

Measuring range

08 = 8 mm/s rms
10 = 10 mm/s rms
16 = 16 mm/s rms (standard)
20 = 20 mm/s rms
25 = 25 mm/s rms
32 = 32 mm/s rms
50 = 50 mm/s rms
64 = 64 mm/s rms
128 = 128 mm/s rms
256 = 256 mm/s rms
512 = 512 mm/s rms

Frequency range

00 = 10 – 1000 Hz (standard)
01 = 1 – 1000 Hz

Housing material

00 = 1.4305 (V2A) (standard)
01 = 1.4404 (V4A)
02 = 1.4462 duplex stainless steel

Housing fixing thread (standard)

00 = M8 x 8 mm; pitch 1.25 mm

Connection

000 = M12 connector (standard)
020 = 2 m integrated cable
050 = 5 m integrated cable
100 = 10 m integrated cable

Don’t see your desired configuration listed? Please contact us and we can offer you a solution for your specific needs.

19 EU and UK Declaration of Conformity

Declaration of conformity

HAUBER-Elektronik GmbH
Fabrikstraße 6
D-72622 Nürtingen-Zizishausen

declares under our sole responsibility that the products listed below that relate to this declaration meet the basic health and safety requirements of the norms and directives below.

Product series

HE100, HE101, HE102, HE103

Affixed CE and UKCA marking

CE 0539 UKCA 0843

ATEX Annex

UL International Demko A/S certifies as **Notified Body No. 0539** according to the Directive of the Council of the European Community of 26 February 2014 (2014/34/EU) that the manufacturer maintains a quality assurance system for production that complies with **Annex IV** of this Directive.

UKEx Annex

UL International Demko A/S certifies as **Notified Body No. 0843** according to the UK Legislative Decree 2016:1107 of 08 December, 2016, that the manufacturer maintains a production quality system that complies with **Annex IV** of this Legislative Decree.

Norms and directives

Directive	Norms
2014/30/EU / UKSI 2016:1091	EN 61000-6-2:2005 EN 61000-6-3:2007 + A1:2011
2014/34/EU / UKSI 2016:1107	EN 60079-0:2018/ AC:2020-02 EN 60079-1:2014 EN 60079-11:2012 EN 60079-31:2014
2011/65/EU / UKSI 2012:3032	

Marking and certificates

HE100.01 / HE101.01 / HE102.01 / HE103.01

Marking	Certificate
Ex II 2 G Ex db IIC T4 Gb Ex II 2 D Ex tb IIIC T120 °C Db	ATEX: PTZ 16 ATEX 0029 X Rev 3 UKEx: UL22UKEX2481X

HE100.02

Marking	Certificate
Ex II 2 G Ex ib IIC T4 Gb Ex II 2 D Ex ib IIIC T125 °C Db	ATEX: PTZ 16 ATEX 0029 X Rev 3 UKEx: UL22UKEX2481X

Signature

Nürtingen, 07/11/2022

Place and date

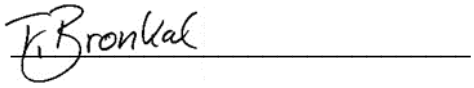

Tobias Bronkal, Managing Owner