87045 LIMOGES Cedex
Téléphone : 05 55 06 87 87 – Télécopie : 05 55 06 88 88

Signalling auxiliary switch for latching relay and contactor

Cat. N°(s) : 4 124 29 / 4 124 30



SOMMAIRE PAGES

1. Description, use 1
2. Range 1
3. Overall dimensions 1
4. Preparation - Connection 1
5. General characteristics 2
6. Conformity and approvals 3

1. DESCRIPTION - USE

Symbol :

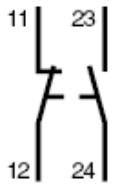

Technology :
. Mechanical « NO+NC » change-over switch

Use :
. Used to signal the position status, open or closed, of the contacts of the device with which it is associated.

2. RANGE

Auxiliary change-over switches:
. cat. n° 4 124 29 : change-over switch NO+NC
. cat. n° 4 124 30 : change-over switch NO+NC

Rated current :
. In = 5 A

Rated voltage :
. Un = 250 V~

3. OVERALL DIMENSIONS

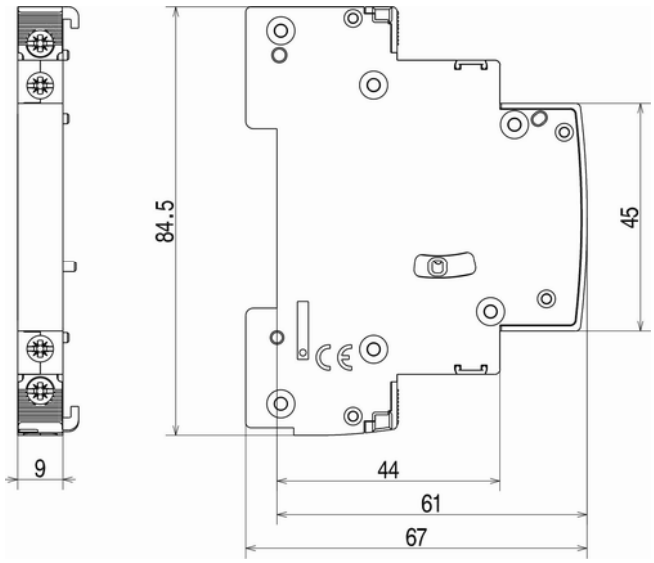

4. PREPARATION - CONNECTION

Association of the auxiliaries :
. Auxiliaries are fitted on Legrand latching relay's and contactors left side cat n° 4 12x xx.
. Fitted with no tool to the associated device by the mean of two plastic clamps.

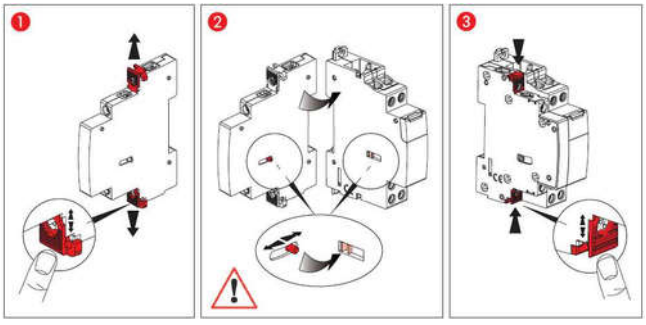

4. PREPARATION - CONNECTION *(continued)*

. to a contactor : 2 change-over auxiliary switches maximum (2 auxiliaries cat. n° 4 124 29 or 2 auxiliaries cat. n° 4 124 30)
. to a latching relay : 2 auxiliaries maximum, whether two change-over auxiliary switches (cat. n° 4 124 29), whether one centralized control auxiliary (cat. n° 4 124 33 or 4 124 34) and one change-over auxiliary switch (cat. n° 4 124 29), whether one maintained control auxiliary (cat. n° 4 124 37) and one change-over auxiliary switch (cat. 4 124 29). Auxiliaries Cat. No. 4 124 33, 4 124 34 or 4 124 37 must be placed directly next to the pulse operated latching relay.

Compatibility :

. « NC + NO » item cat. n° 4 124 29 can be associated to

- single pole, double pole and four pole latching relay
- 16 A and 25 A double pole contactors (« NO+NC », « 2 NO », « 2 NC ») one module wide

. « NC + NO » auxiliary cat.n° 4 124 30 fits contactors 16 A and 25 A triple pole and four pole (« 2NO+2NC », « 3NO », « 3NO+1NC », « 4NC », « 4NO »), 2 module wide

Installation software :

. XL PRO

Wiring diagram :

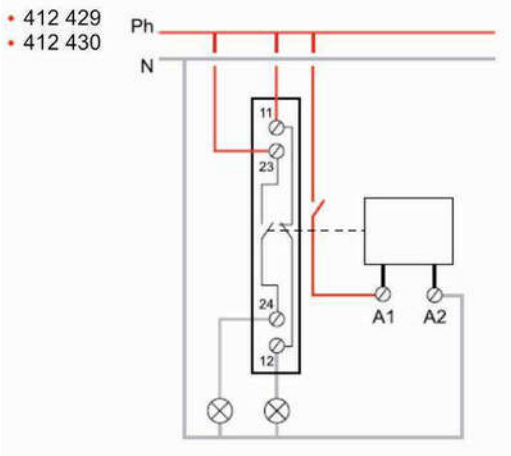

Operating positions :

. Vertical, horizontal, flat

Fixing :

. On EN 50-055 or DIN 35 symmetrical rail, by the mean of the associated device

Connection :

. Terminals protected against direct contact (IP 20 wired device)
. Cage terminals, with disengageable or captive screws
. Terminal depth : 8 mm
. Terminal capacity :

- 1 x 2.5 mm² flexible (with or without ferrule) ou rigid cable

4. PREPARATION - CONNECTION *(continued)*

Tools recommended :

. For terminals : screwdriver, insulated or not, Pozidriv n° 1 or 4 mm blade.

Resistance to tremors :

. No change of contact state during the “resistance to tremors” test in accordance with EN 60898 standard

Operation :

. Contacts are operated by the associated latching relay or contactor

Protection degree :

. Terminal ingress protection : IP2x (device connected) in accordance with IEC 529, EN 60529 and NF C 20-010 standard.
. Front face ingress protection : IP3XD
. Classe II, front face behind a cabinet faceplate
. Protection against mechanical shocks : IK04 according to NF EN 50-102 / NF C 20-015 (juin 1995) standard

5. GENERAL CHARACTERISTICS :

Marking :

. Front face, by permanent ink pad printing



. Side face, by laser marking

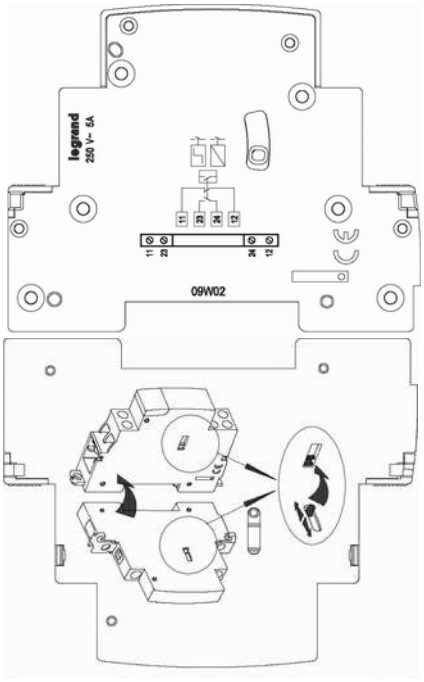

5. GENERAL CHARACTERISTICS (continued) :

Isolation (distance between contacts) :
. > 3 mm

Rated voltage :
. Ue = 250 V~

Max operating voltage :
. 250 V~ 50/60 Hz
. 48V DC

Insulation rated voltage (Ui) :
. 250 V~

Insulation voltage between contacts :
. 2000 V

Dielectric strength :
. 2000 V

Electrical shocks withstand rated voltage :
. U imp = 4 kV

Rated frequency :
. 50 / 60 Hz

Rated current :
. Ie = 5 A
. derating of the current according to the voltage

Un	400 V~	230 V~
Ie	2 A	5 A

Endurance :
. 150 000 off-load changes of position
. 150 000 on-load changes of position (load = 10 incandescent indicator lights)

Weight :
. 0.035 kg

Packaged volume :
. Volume : 2 dm^3
. packaged by one piece

Moulded case material :
. Polyamid

Characteristics of the plastic material :
. Resistance to glow wire during 30 s at 960°C according to IEC 695-2-1
. self-extinguishing according to UL94 V0/V1

Shaking resistance (in accordance to IEC 68.2.6) :
. Axe : x, y, z
. Fréquency : 10 à 55 Hz during 30 minutes
. Accélération : 3 g (1 g = 9.81 $m.s^{-2}$)

Height effect :
. no effect up to 4 000 m

6. COMPLIANCE AND APPROVALS

Classification in accordance with Appendix Q: (standard IEC/EN 60947-1)

. Category F

Inter alia: temperature test range -25°C/+70°C, vibration test 2 Hz to 13.2 Hz with ±1 mm movement, 13.2 Hz to 100 Hz acceleration ±0.7 g, salt spray in accordance with IEC 60068-2-52

Respect for the environment – Compliance with European Union Directives:

. Compliance with Directive 2002/95/EC of 27/01/03 known as "RoHS" which provides for a restriction on the use of dangerous substances such as lead, mercury, cadmium, hexavalent chromium and polybrominated biphenyl (PBB) and polybrominated diphenyl ether (PBDE) brominated flame retardants from 1st July 2006
. Compliance with the Directive 91/338/EEC of 18/06/91 and decree 94-647 of 27/07/04

Plastic materials :
. Zero halogen plastic materials
. Labelling compliant with ISO 11469 et ISO 1043.

Packaging :
. Design and manufacture of packaging compliant with decree 98-638 of 20/07/98 and Directive 94/62/EC