PV7001

Pressure switch with IO-Link

PV-250-SEG14-UFRVG/US/ /

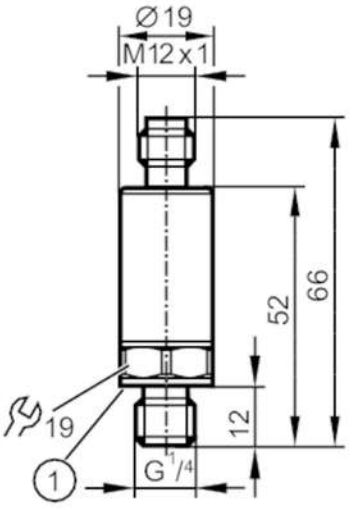

1 Sealing

Product characteristics			
Number of inputs and outputs	Number of digital outputs: 2		
Measuring range	0...250 bar	0...3626 psi	0...25 MPa
Process connection	threaded connection G 1/4 external thread (DIN EN ISO 1179-2); internal thread:M5		
Application			
Measuring element	metallic thin film cell		
Application	for industrial applications		
Media	liquids and gases		
Medium temperature [°C]	-40...90		
Min. bursting pressure	1200 bar	17400 psi	120 MPa
Pressure rating	625 bar	9060 psi	62.5 MPa
Note on pressure rating	static		
Vacuum resistance	-1000 mbar	-0.1 MPa	
Type of pressure	relative pressure		
Electrical data			
Operating voltage [V]	18...30 DC		
Current consumption [mA]	< 15		
Min. insulation resistance [MΩ]	100; (500 V DC)		
Protection class	III		
Reverse polarity protection	yes		
Power-on delay time [s]	< 0.3		
Inputs / outputs			
Number of inputs and outputs	Number of digital outputs: 2		
Outputs			
Total number of outputs	2		
Output signal	switching signal; IO-Link; (configurable)		
Electrical design	PNP/NPN		
Number of digital outputs	2		

PV7001

Pressure switch with IO-Link

PV-250-SEG14-UFRVG/US/ /

Output function	normally open / normally closed; (parameterisable)		
Max. voltage drop switching output DC [V]	2		
Permanent current rating of switching output DC [mA]	100		
Switching frequency DC [Hz]	< 170		
Short-circuit protection	yes		
Type of short-circuit protection	pulsed		
Overload protection	yes		
Measuring/setting range			
Measuring range	0...250 bar	0...3626 psi	0...25 MPa
Set point SP	2.5...250 bar	37...3626 psi	0.25...25 MPa
Reset point rP	1.3...248.8 bar	18...3608 psi	0.13...24.88 MPa
In steps of	0.1 bar	1 psi	0.01 MPa
Factory setting	SP1 = 62.5 bar	rP1 = 57.5 bar	ou1 = Hno;
	SP2 = 187.5 bar	rP2 = 182.5 bar	ou2 = Hno;
	dS1/dS2 = 0 ms	dr1/dr2 = 0 ms	
	coF = 0 %	P-n = PnP	dAP= 60 ms
Accuracy / deviations			
Switch point accuracy [% of the span]	< ± 0,5 (nach DIN EN 61298-2)		
Repeatability [% of the span]	< ± 0,05; (with temperature fluctuations < 10 K)		
Characteristics deviation [% of the span]	< ± 0,5; (linearity incl. hysteresis and repeatability, limit value setting to DIN EN IEC 62828-1)		
Linearity deviation [% of the span]	< ± 0,1 (BFSL) / < ± 0,2 (LS)		
Hysteresis deviation [% of the span]	< ± 0,2		
Long-term stability [% of the span]	< ± 0,1; (per 6 months)		
Temperature coefficient zero point [% of the span / 10 K]	< 0,1 (-25...90 °C) / < 0,2 (-40...-25 °C)		
Temperature coefficient span [% of the span / 10 K]	< 0,1 (-25...90 °C) / < 0,2 (-40...-25 °C)		
Response times			
Response time [ms]	< 3		
Software / programming			
Parameter setting options	hysteresis / window; normally open / normally closed; switching logic; switch-on/switch-off delay; Damping		
Interfaces			
Communication interface	IO-Link		
Transmission type	COM2 (38,4 kBaud)		
IO-Link revision	1.1		
SDCI standard	IEC 61131-9		
Profiles	Smart Sensor: Process Data Variable; Device Identification, Device Diagnosis		

PV7001

Pressure switch with IO-Link

PV-250-SEG14-UFRVG/US/ /

SIO mode		yes	
Required master port type		A	
Process data analogue		2	
Process data binary		2	
Min. process cycle time	[ms]	5	
Supported DeviceIDs		**Type of operation**	**DeviceID**
		default	709
Operating conditions			
Ambient temperature	[°C]	-40...90	
Storage temperature	[°C]	-40...100	
Protection		IP 67; IP 69K	
Tests / approvals			
EMC		DIN EN 61326-1	
Shock resistance		DIN EN 60068-2-27	500 g (1 ms)
Vibration resistance		DIN EN 60068-2-6	20 g (10...2000 Hz)
MTTF	[years]	667.77	
UL approval		UL Approval no.	J016
Pressure Equipment Directive		Sound engineering practice; can be used for group 2 fluids; group 1 fluids on request	
Mechanical data			
Weight	[g]	64.5	
Housing		cylindrical	
Dimensions	[mm]	Ø 19 / L = 66	
Materials		stainless steel (630/1.4542/17-4 PH); stainless steel (316L/1.4404); PEI	
Materials (wetted parts)		stainless steel (303/1.4305); stainless steel (630/1.4542/17-4 PH)	
Min. pressure cycles		60 million; (at 1.2 times nominal pressure)	
Tightening torque	[Nm]	25...35; (recommended tightening torque; depends on lubrication, seal and pressure rating)	
Process connection		threaded connection G 1/4 external thread (DIN EN ISO 1179-2); internal thread:M5	
Process connection sealing		FKM (DIN EN ISO 1179-2)	
Restrictor element integrated		yes	
Remarks			
Remarks		BFSL = Best Fit Straight Line	
		LS = limit value setting	
Pack quantity		1 pcs.	

Electrical connection

Connector: 1 x M12; coding: A



PV7001

Pressure switch with IO-Link

PV-250-SEG14-UFRVG/US/ /

Connection

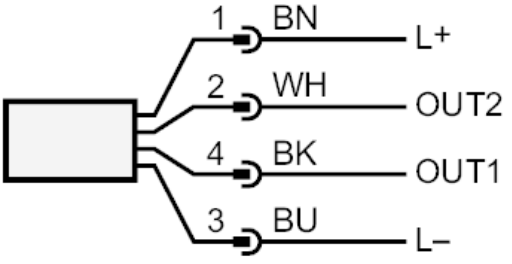

OUT1	switching output IO-Link
OUT2	switching output
	colours to DIN EN 60947-5-2
	Core colours :
BK =	black
BN =	brown
BU =	blue
WH =	white