# SOLENOID VALVES

normally closed, pilot operated
floating piston, high pressure
1/4 to 3/4

NC

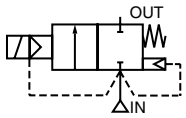


**2/2**
Series
**223**



3

## FEATURES

- *Solenoid valves satisfy all relevant EC directives*
- *Heavy duty two way shut-off solenoid valves for control of air, inert gas, water, oil and other gases/liquids compatible with the sealing materials used*
- *Valves require a minimum ΔP*

## GENERAL

| | |
|---|---|
| **Differential pressure** | 0,7 to 100 bar [1 bar = 100 kPa] |
| **Maximum viscosity** | 65 cSt ($mm^2/s$) |
| **Response times** | 15 - 60 ms |

| fluids (∗) | temperature range (TS) | sealings (∗) |
|---|---|---|
| air, inert gas, water, oil | -20 to +90°C | PA (nylon)<br>PTFE (teflon) |

## MATERIALS IN CONTACT WITH FLUID

**(∗) Ensure that the compatibility of the fluids in contact with the materials is verified**

| | Brass body | Stainless steel body |
|---|---|---|
| **Body** | Brass | AISI 303 SS |
| **Core tube** | Stainless steel | Stainless steel |
| **Core and plugnut** | Stainless steel | Stainless steel |
| **Springs** | Stainless steel | Stainless steel |
| **Seat** | Brass | Stainless steel |
| **Core disc** | UR (UR moulded) | UR (UR moulded) |
| **Sealing** | NBR (nitrile / buna-n) | NBR (nitrile / buna-n) |
| **Piston** | Stainless steel or PA | Stainless steel |
| **Piston disc** | PTFE or PA | PTFE |
| **Piston rings** | PTFE (carbon filled) | PTFE (carbon filled) |
| **Shading coil** | Copper | Silver |

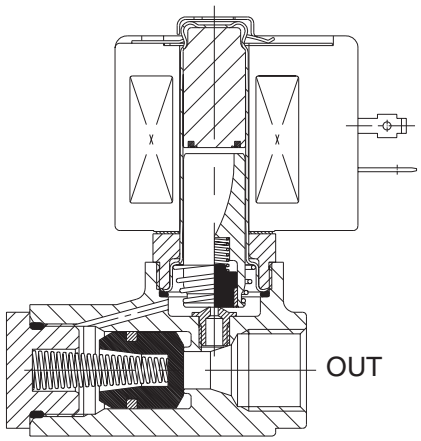


## ELECTRICAL CHARACTERISTIC

| | |
|---|---|
| **Coil insulation class** | F |
| **Connector** | Spade plug (Pg 11P) |
| **Connector specification** | ISO 4400 |
| **Electrical safety** | IEC 335 |
| **Standard voltages** | DC (=) : 24V |
| (Other voltages and 60 Hz on request) | AC (~) : 24V - 115V - 230V / 50 Hz |

| coil type | power ratings | | | | ambient temperature ranges (TS) | protection |
|---|---|---|---|---|---|---|
| | inrush ~ | holding ~ | | hot/cold = | | |
| | (VA) | (VA) | (W) | (W) | (°C) | |
| CMXX-FT | 55 | 23 | 10,5 | 9 / 11,2 | -20 to +75 | moulded IP65 |
| CMXX-FB | 78 | 35 | 16,7 | - | -20 to +50 | moulded IP65 |
| CMXX-FF | - | - | - | 14 / 19,7 | -20 to +25 | moulded IP65 |

## SPECIFICATIONS

| pipe size | orifice size | flow coefficient Kv | | operating pressure differential (bar) | | | coil type | | catalogue number | OPTIONAL | | | |
|---|---|---|---|---|---|---|---|---|---|---|---|---|---|
| | | | | min. | maximum (PS) air/water/oil (∗) | | | | | FPM | EPDM | CR | PTFE |
| NPT | (mm) | ($m^3/h$) | (l/min) | | ~ | = | ~ | = | | | | | |
| **Brass body** | | | | | | | | | | | | | |
| 1/4 | 8 | 1,3 | 21,7 | 0,7 | 50 | 30 | CMXX-FT | CMXX-FT | **SC B223A121** | **V** | **E** | **J** | |
| 1/4 | 8 | 1,3 | 21,7 | 0,7 | 100 | 35 | CMXX-FB | CMXX-FF | **SC B223A125** | **V** | **E** | **J** | |
| 3/8 | 8 | 1,3 | 21,7 | 0,7 | 50 | 30 | CMXX-FT | CMXX-FT | **SC B223A123** | **V** | **E** | **J** | |
| 3/8 | 8 | 1,3 | 21,7 | 0,7 | 100 | 35 | CMXX-FB | CMXX-FF | **SC B223A127** | **V** | **E** | **J** | |
| 1/2 | 9 | 2,7 | 45,0 | 1,8 | 100 | 35 | CMXX-FB | CMXX-FF | **SC B223A103** | **V** | **E** | **J** | |
| 3/4 | 19 | 6,7 | 112 | 1,8 | 50 | 20 | CMXX-FB | CMXX-FT | **SC B223B005** (1) | **V** | **E** | **J** | **T** |
| **Stainless steel body** | | | | | | | | | | | | | |
| 1/2 | 9 | 2,7 | 45,0 | 1,8 | 100 | 35 | CMXX-FB | CMXX-FF | **SC B223A010** | **V** | **E** | **J** | |
| 3/4 | 19 | 6,7 | 112 | 1,8 | 50 | 20 | CMXX-FB | CMXX-FT | **SC B223A012** | **V** | **E** | **J** | |

(1) Nylon piston (PA).

## OPTIONS

- Valves can also be supplied with FPM (fluorelastomer / viton), EPDM (ethylene-propylene), PTFE (teflon) and CR (chloroprene / neoprene) sealings and discs. Use the appropriate optional suffix letter for identification
- Waterproof enclosure with embedded screw terminal coil and Pg 13,5 cable gland to meet CEE-10 (IP67)
- Flameproof enclosures for hazardous locations according to "**CENELEC**" and national standards (see section 10)
- Explosionproof and watertight enclosures according to "**NEMA**" standards (see section 10)
- Compliance with "**UL**" and "**CSA**" standards
- Low power execution, see X012 catalogue
- Plug with visual indication and/or with peak voltage suppression (see section 11)
- Normally Open constructions

## INSTALLATION

- The valves can be mounted in any position without affecting operation
- Pipe connection identifier is: B = NPT (ANSI 1.20.3)
- The third digit in the catalogue number indicates the standard pipe connection
- Other pipe connections are available on request
- Installation/maintenance instructions are included with each valve
- Spare Parts Kit and replacement coils are available (see section 11)

## DIMENSIONS (mm), WEIGHT (kg)

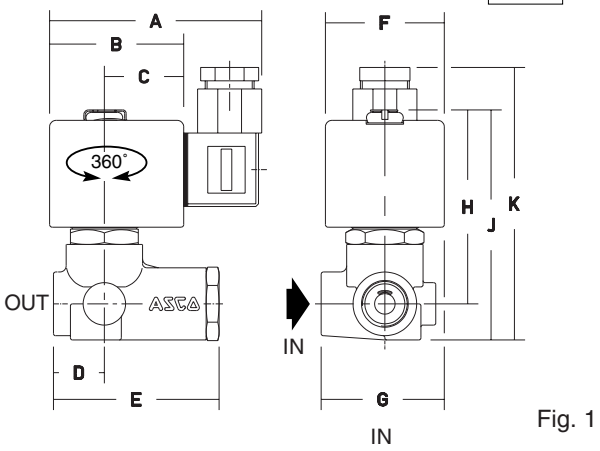


Fig. 1

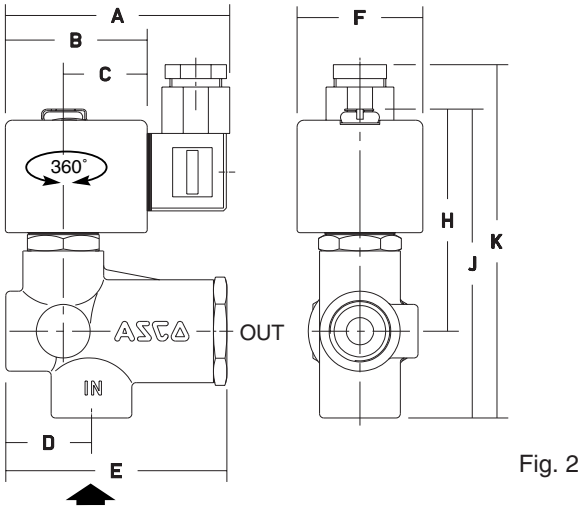


Fig. 2

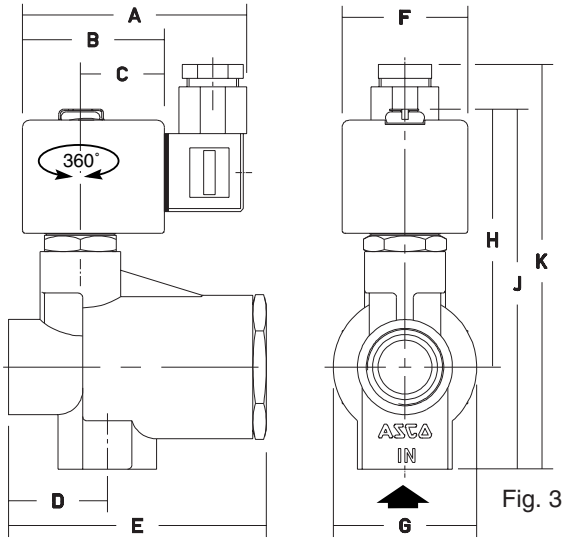


Fig. 3

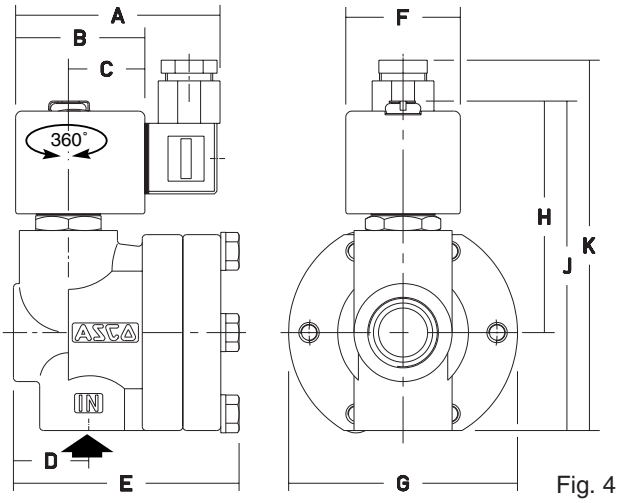


Fig. 4

| catalogue number SC B223 | A | B | C | D | E | F | G | H | J | K | weight (1) | (C) |
|---|---|---|---|---|---|---|---|---|---|---|---|---|
| A121 - A125 - A123 - A127 | 80 | 50 | 30 | 20 | 65 | 45 | 46 | 72 | 86 | 103 | 0,7 | fig. 1 |
| A103 - A010 | 80 | 50 | 30 | 31 | 81 | 45 | - | 78 | 109 | 126 | 1,0 | fig. 2 |
| B005 | 80 | 50 | 30 | 34 | 91 | 45 | 50 | 91 | 127 | 144 | 1,5 | fig. 3 |
| A012 | 80 | 50 | 30 | 29 | 88 | 45 | 89 | 88 | 126 | 143 | 4,0 | fig. 4 |

(1) incl. coil and connector (**C**) Construction type

**ASCO/JOUCOMATIC** reserves the right to alter the availability, design and specifications without notice.