Photoelectric sensor
Retro-reflective sensor with polarizing filter
QS18VP6LP

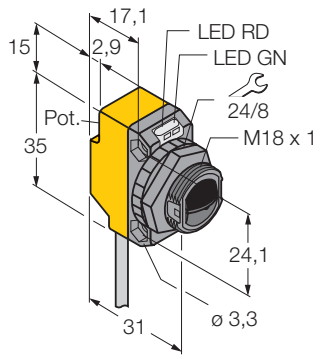

- **compact housing**
- **rectangular**
- **alarm function**
- **LED 360° visible**
- **Cable, 2 m**
-

Wiring diagram

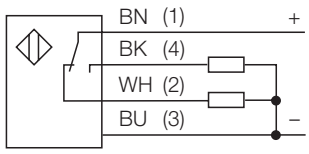

Type	QS18VP6LP
Ident-No.	3061630
Type of light	rot
Wave length	660 nm
Range	≤ 3,5 m
Rated operational voltage (DC) U_B	10... 30 VDC
Rated operational current (DC) I_e	≤ 100 mA
No-load current I_0	≤ 32 mA
Short-circuit protection	yes, cyclic
Reverse polarity protection	yes
Output function	normally open / normally closed, PNP
Max. switching frequency	≤ 0,8 kHz
Max. switch-on delay	≤ 100 ms
Degree of protection	IP67
Operation temperature	-20...+ 70 °C
Housing style	rectangular; QS18
Housing material	plastic, ABS
Wiring	cable, PVC
Cable length	2 m
Cable cross section	4 x 0,8 mm^2
Supply voltage indication	LED green
Switching status indication	LED yellow
Error indication	LED green flash
Alarm indication	LED yellow flash

Function principles

Retro-reflective mode sensors combine both the emitter and receiver into a single housing. The light beam from the emitter is bounced back to the receiver from a special retro-reflective target. An object is detected by interrupting this beam. Retro-reflective mode sensors have some advantages of opposed mode sensors (a good contrast and a large excess gain). Moreover, only one sensor housing has to be installed and wired. A disadvantage in comparison to opposed mode sensors is the lower sensing distance and possible faulty detections caused by highly reflective objects when using non-polarised sensors.

Excess gain curve

Excess gain in relation to the distance (type LP)

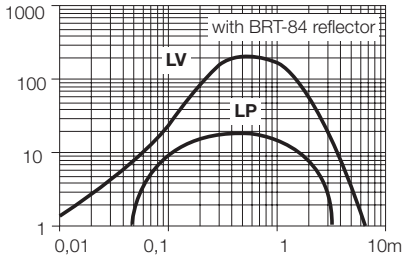

Subject to change without notice • © Hans Turck GmbH & Co.KG 2002 • Edition: • 29.11.2002

Hans Turck GmbH & Co.KG • Postfach • D-45466 Mülheim an der Ruhr • Telefon 02 08/49 52-0 • Telefax 02 08/49 52-264