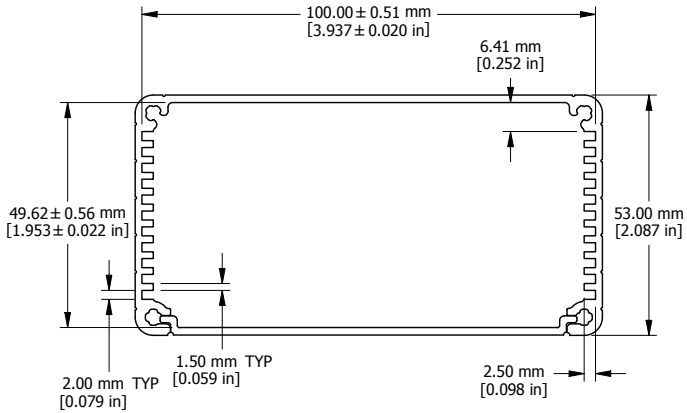

EXTRUSION

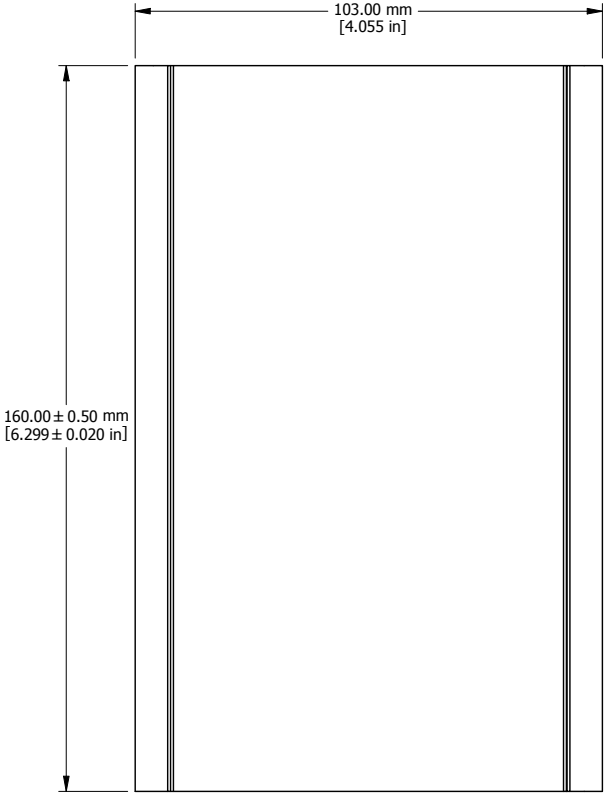

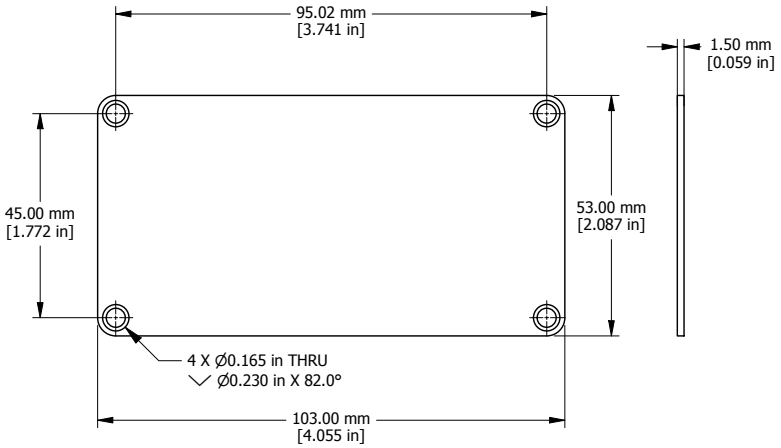

END PLATE

EXTRUSION DESIGNED FOR 100MM WIDE PC BOARD

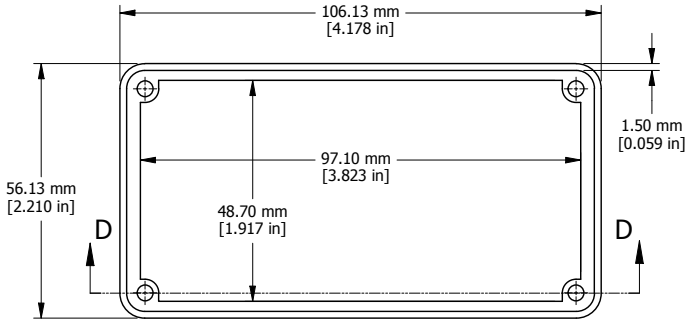

OPEN BEZEL

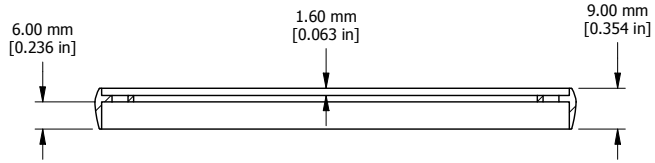

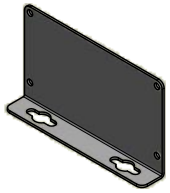

OPTIONAL FLANGE END PANELS
1455NF

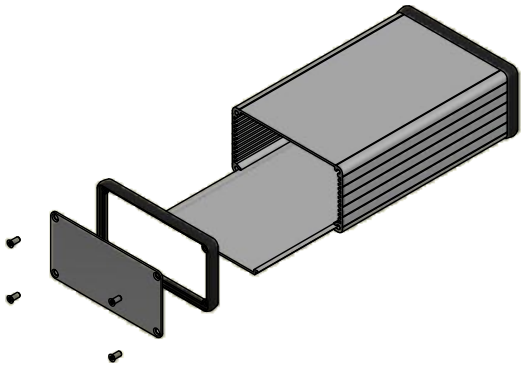

EXPLODED ASSEMBLY VIEW

Enclosures can be Factory Modified (Milling, Drilling, Printing etc.)
Solid models of this enclosure available in STEP or IGES.
Contact Factory mjm@hammondmfg.com

NOTE
Purchased assembly includes box, plastic bezels, end panels, #6 Taptight screws and self adhesive rubber feet.
Box made from Extruded Aluminum 6063.
Bezels made with polycarbonate.

1455N1601	
PART NUMBERS	
Clear Anodized	1455N1601
Black Anodized	1455N1601BK
Blue Anodized	1455N1601BU
Red Anodized	1455N1601RD
ACCESSORIES	
See website for accessories.	

HAMMOND MANUFACTURING™

1455N1601

www.hammondmfg.com