# IEC210

## Inductive full-metal sensor

IEK3002BAPKG/AM/US-104

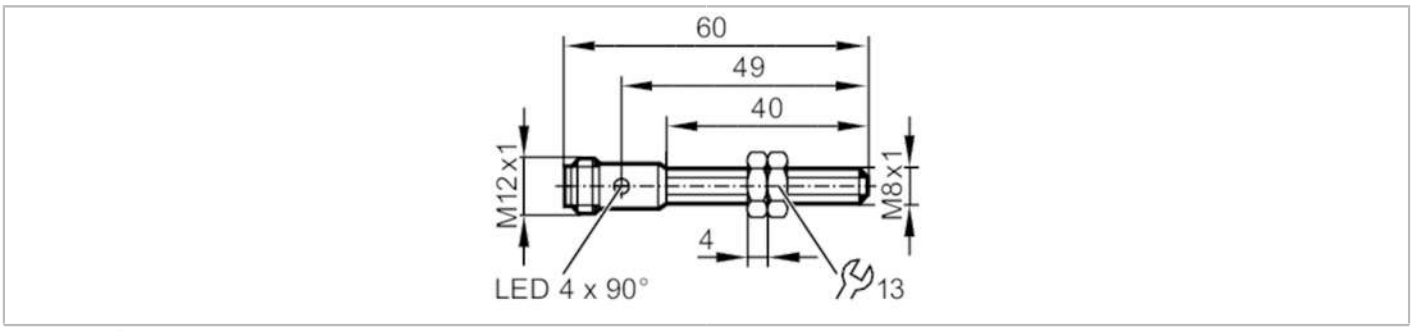


| | | |
|---|---|---|
| **Product characteristics** | | |
| Electrical design | | PNP |
| Output function | | normally closed |
| Sensing range | [mm] | 2 |
| Housing | | threaded type |
| Dimensions | [mm] | M8 x 1 / L = 60 |
| **Application** | | |
| Special feature | | Gold-plated contacts; Increased sensing range; Full-metal housing |
| Application | | Use in machine tools, coolants and lubricants |
| Pressure rating | [bar] | 50 |
| Note on pressure rating | | sensing face |
| **Electrical data** | | |
| Operating voltage | [V] | 10...30 DC |
| Current consumption | [mA] | < 10 |
| Protection class | | III |
| Reverse polarity protection | | yes |
| **Outputs** | | |
| Electrical design | | PNP |
| Output function | | normally closed |
| Max. voltage drop switching output DC | [V] | 2.5 |
| Permanent current rating of switching output DC | [mA] | 100 |
| Switching frequency DC | [Hz] | 100 |
| Short-circuit protection | | yes |
| Overload protection | | yes |
| **Detection zone** | | |
| Sensing range | [mm] | 2 |
| Real sensing range Sr | [mm] | 2 ± 10 % |
| Operating distance | [mm] | 0...1.62 |
| Increased sensing range | | yes |
| **Accuracy / deviations** | | |
| Correction factor | | steel: 1 / stainless steel: 0.7 / brass: 0.7 / aluminium: 0.6 / copper: 0.5 |
| Hysteresis | [% of Sr] | 1...20 |

# IEC210

## Inductive full-metal sensor

IEK3002BAPKG/AM/US-104

| | | | |
|---|---|---|---|
| Switch point drift | [% of Sr] | -10...10 | |
| **Operating conditions** | | | |
| Ambient temperature | [°C] | -25...70 | |
| Protection | | IP 67; IP 68; IP 69K; ("Coolant") | |
| **Tests / approvals** | | | |
| EMC | | EN 61000-4-2 ESD | 4 kV CD / 8 kV AD |
| | | EN 61000-4-3 HF radiated | 10 V/m |
| | | EN 61000-4-4 Burst | 2 kV |
| | | EN 61000-4-6 HF conducted | 10 V |
| | | EN 55011 | class B |
| Impact resistance | | EN 60068-2-75 Ehc | 1 J |
| MTTF | [years] | 1446 | |
| UL approval | | Ta | -25...70 °C |
| | | Enclosure type | Type 1 |
| | | power supply | Limited Voltage/Current |
| | | UL Approval no. | A028 |
| | | File number UL | E174191 |
| **Mechanical data** | | | |
| Weight | [g] | 21.7 | |
| Housing | | threaded type | |
| Mounting | | flush mountable | |
| Dimensions | [mm] | M8 x 1 / L = 60 | |
| Thread designation | | M8 x 1 | |
| Materials | | stainless steel (1.4404 / 316L); sensing face: stainless steel (1.4404 / 316L); LED window: PEI; lock nuts: stainless steel (1.4404 / 316L) | |
| Tightening torque | [Nm] | < 5 | |
| Full-metal housing | | yes | |
| **Displays / operating elements** | | | |
| Display | | switching status | 4 x 90° LED, yellow |
| **Accessories** | | | |
| Items supplied | | lock nuts: 2 | |
| **Remarks** | | | |
| Pack quantity | | 1 pcs. | |

**Electrical connection - plug**

Connector: 1 x M12; coding: A; Contacts: gold-plated

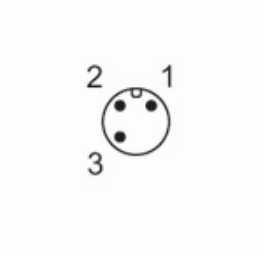

# IEC210

## Inductive full-metal sensor

**IEK3002BAPKG/AM/US-104**

### Connection

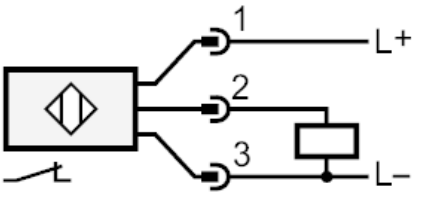


### Diagrams and graphs

Installation

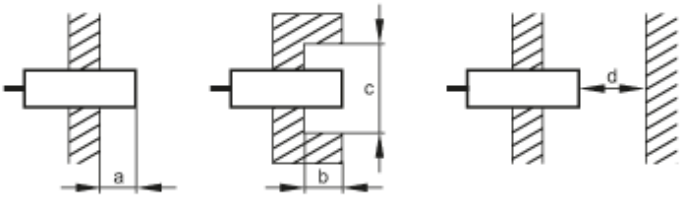


| [mm] | a | b | c (Ø) | d |
|---|---|---|---|---|
| Fe | 0 | 0 | - | 6 |
| Al | 4 | 4 | 24 | 6 |

