

Image may differ from product. See technical specification for details.

PCM 10010550 E

PTFE composite straight bushing

SKF PTFE composite straight (cylindrical) bushings are suitable for oscillating, rotating and linear movements, and can accommodate radial loads. Despite their thin-walled design, they can accommodate heavy loads. They also provide good heat dissipation, therefore enabling relatively high sliding velocities.

- Maintenance-free operation
- Cost-effective with long service life
- High operating temperatures
- High load carrying capacity
- High sliding velocity and small operating clearance

Overview

Dimensions

Bore diameter	100 mm
Outside diameter	105 mm
Width	50 mm

Performance

Basic dynamic load rating	390 kN
Basic static load rating	1 220 kN

Properties

Design	Straight
Material	PTFE composite
Relubrication feature	Without

Logistics

Product net weight	0.297 kg
eClass code	23-05-01-90
UNSPSC code	31171605

Technical specification

Material	PTFE composite
Operating temperature	min. -200 °C
Operating temperature	max. 250 °C

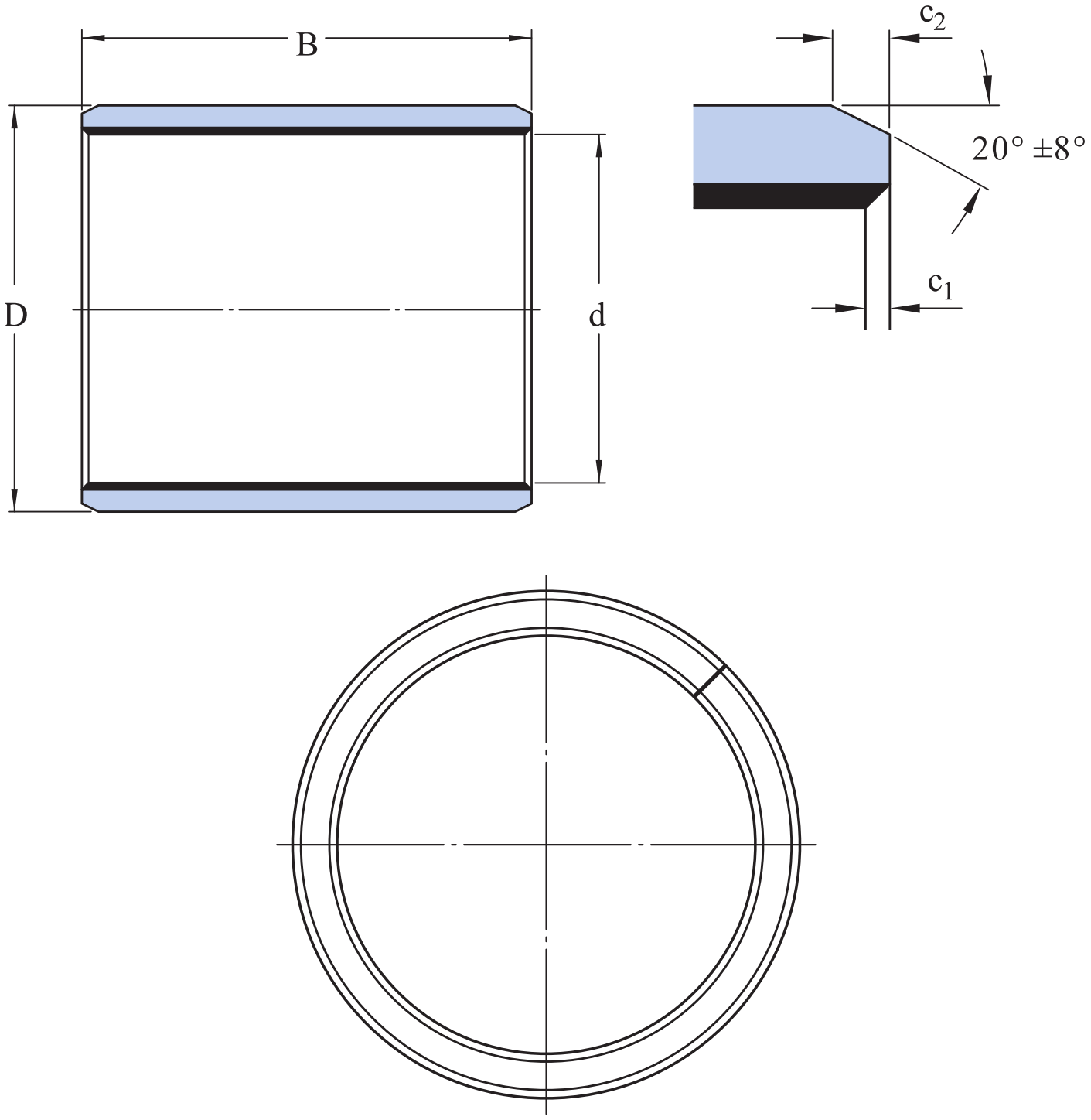

Dimensions

d	100 mm	Bore diameter
D	105 mm	Outside diameter
B	50 mm	Width
c_1	min. 0.2 mm	Length chamfer bore - axial direction

c_1	max. 1 mm	Length chamfer bore - axial direction
c_2	min. 0.8 mm	Length chamfer outside diameter - axial direction
c_2	max. 1.6 mm	Length chamfer outside diameter - axial direction

Recommended fits

Tolerance shaft	h8
Tolerance housing	H7

Calculation data

Basic dynamic load rating, radial direction	C	390 kN
Basic static load rating, radial direction	C_0	1 220 kN
Specific dynamic load factor	K	80 N/mm^2
Specific static load factor	K_0	250 N/mm^2
Factor depending on material and bearing type	K_M	480
Permissible sliding velocity	v	max. 2 m/s
Coefficient of friction	μ	min. 0.03
Coefficient of friction	μ	max. 0.25

Terms of use

By accessing and using this website / app owned and published by AB SKF (publ.) (556007-3495 · Gothenburg) (“SKF”), you agree to the following terms and conditions:

Warranty Disclaimer and Limitation of Liability
Although every care has been taken to assure the accuracy of the information on this website / app, SKF provides this information "AS IS" and DISCLAIMS ALL WARRANTIES, EXPRESS OR IMPLIED, INCLUDING, BUT NOT LIMITED TO, IMPLIED WARRANTIES OF MERCHANTABILITY AND FITNESS FOR A PARTICULAR PURPOSE. You acknowledge that your use of this website / app is at your sole risk, that you assume full responsibility for all costs associated with use of this website / app, and that SKF shall not be liable for any direct, incidental, consequential, or indirect damages of any kind arising out of your access to, or use of the information or software made available on this website / app.

Any warranties and representations in this website / app for SKF products or services that you purchase or use will be subject to the agreed upon terms and conditions in the contract for such product or service.

Further, for non-SKF websites / apps that are referenced in our website / app or where a hyperlink appears, SKF makes no warranties concerning the accuracy or reliability of the information in these websites / apps and assumes no responsibility for material created or published by third parties contained therein. In addition, SKF does not warrant that this website / app or these other linked websites / apps are free from viruses or other harmful elements.

Third Party Services
When viewing YouTube content via the SKF website(s) (i.e. using YouTube API Services), you agree to be bound by the YouTube Terms of Service.

Copyright
Copyright in this website / app copyright of the information and software made available on this website / app rest with SKF or its licensors. All rights are reserved. All licensed material will reference the licensor that has granted SKF the right to use the material. The information and software made available on this website / app may not be reproduced, duplicated, copied, transferred, distributed, stored, modified, downloaded or otherwise exploited for any commercial use without the prior written approval of SKF. However, it may be reproduced, stored and downloaded for use by individuals without prior written approval of SKF. Under no circumstances may this information or software be supplied to third parties.

This website /app includes certain images used under license from Shutterstock, Inc.

Trademarks and Patents
All trademarks, brand names, and corporate logos displayed on the website / app are the property of SKF or its licensors, and may not be used in any way without prior written approval by SKF. All licensed trademarks published on this website / app reference the licensor that has granted SKF the right to use the trademark. Access to this website / app does not grant to the user any license under any patents owned by or licensed to SKF.

Changes
SKF reserves the right to make changes or additions to this website / app at any time.