HENGSTLER

TECHNICAL DATASHEET

Absolute Encoder AC 58 - SSI-P



Clamping flange

- Compact design: 59 mm mounting depth for single or multiturn
- Aids for start up and operation: diagnostic LED, preset key with optical response
- Parameterization: Resolution, code type, direction, output format, warning, alarm
- Parameters can be stored in a non-volatile memory
- Integrated RS232 interface

TECHNICAL DATA
mechanical

Housing diameter	58 mm
Shaft diameter	6 mm / 10 mm (Solid shaft) 10 mm / 12 mm (Hub shaft)
Flange (Mounting of housing)	Synchro flange, Clamping flange, Tether, Square flange
Protection class shaft input (EN 60529)	IP64 or IP67
Protection class housing (EN 60529)	IP64 (IP67 optional)
Shaft load axial / radial	40 N / 60 N
Max. speed	max. 10 000 rpm (continuous), max. 12 000 rpm (short term)
Starting torque typ. [1]	≤ 0.01 Nm
Moment of inertia	ca. 3.8 x 10^{-6} kgm²
Vibration resistance (DIN EN 60068-2-6)	100 m/s² (10 ... 500 Hz)
Shock resistance (DIN EN 60068-2-27)	1000 m/s² (6 ms)
Operating temperature	-40 °C ... +100 °C
Storage temperature	-40 °C ... +85 °C
Material shaft	Stainless Steel
Material housing	Aluminum
Weight	approx. 260 g (ST) / 310 g (MT)
Connection	Cable, axial or radial M23 connector (Conin), 12 pole, axial or radial

[1] at 20°C

TECHNICAL DATA
electrical

Supply voltage	DC 10-30 V
Max. current w/o load	250 mA (ST / MT)
Resolution singleturn	10 - 17 Bit
Resolution multiturn	12 Bit
Output code	Binary, Gray
Drives	Clock and Data / RS422
Parametrization	Resolution, Code type, Direction, Output format, Warning, Alarm
Control inputs	Direction, Preset 1, Preset 2
Alarm output	Alarm bit
Status LED	Green = ok, red = alarm

TECHNICAL DATASHEET

Absolute Encoder AC 58 - SSI-P

RECOMMENDED DATA TRANSFER RATE bei SSI

The max. data transfer rate depends on the cable length. For Clock / $\overline{\text{Clock}}$ and Data / $\overline{\text{Data}}$ please use twisted pairs. Use shielded cable.

Cable length	Frequency
< 50 m	< 400 kHz
< 100 m	< 300 kHz
< 200 m	< 200 kHz
< 400 m	< 100 kHz

SYNCHRONOUS-SERAL TRANSFER (SSI)

A clock brush is applied at the SSI interface, causing the encoder data to be serially clocked out. With each new clock brush (min. interval 30 ms) new data is readout. The following main parameters are programmable:

- Preset: Software-Preset and via input/ pushbutton settable presets (can be inactivated)
- Offset: Relative shifting of actual encoder value.
- Scaling: The actual value of the encoder is multiplied with the factor < 1(direct entry, increments per measuring distance or per revolution).
- Direction of rotation: Can be changed via software or input (can be inactivated)
- Output formats SSI: Tree format or standard format (MSB oriented)
- Output code: The choices are Gray or binary code, integer or two's complement representation. Selection of significant bit between 16 and 24 Bit.

In addition, programming of max. 7 status bits is possible:

- up to 4 warning positions
- overspeed
- encoder standstill
- parity
- encoder error
- direction of rotation

PROGRAMMING with SSI

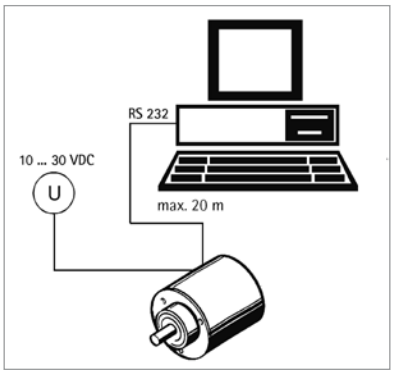

To program the absolute encoder you require a PC, the software WinSSI and the adapter cable.
The encoder is connected to the power supply and the serial interface of your PC with the adapter cable. Using the menue-assisted programme you can then configure the encoder according to the parameters you require.

Absolute Encoder AC 58 - SSI-P

OUTPUT FORMAT SSI, MSB oriented, Multiturn

Status bits 7 ... 1

Clock pulse	1	2	3	4	5	6	7	8	9	10	11	12	13	14	15	16	17	18	19	20	21	22	23	24
Number of data bits 24	M11	M10	M9	M8	M7	M6	M5	M4	M3	M2	M1	M0	S11	S10	S9	S8	S7	S6	S5	S4	S3	S2	S1	S0
23	M10	M9	M8	M7	M6	M5	M4	M3	M2	M1	M0	S11	S10	S9	S8	S7	S6	S5	S4	S3	S2	S1	S0	0
22	M9	M8	M7	M6	M5	M4	M3	M2	M1	M0	S11	S10	S9	S8	S7	S6	S5	S4	S3	S2	S1	S0	0	0
21	M8	M7	M6	M5	M4	M3	M2	M1	M0	S11	S10	S9	S8	S7	S6	S5	S4	S3	S2	S1	S0	0	0	0
20	M7	M6	M5	M4	M3	M2	M1	M0	S11	S10	S9	S8	S7	S6	S5	S4	S3	S2	S1	S0	0	0	0	0
19	M6	M5	M4	M3	M2	M1	M0	S11	S10	S9	S8	S7	S6	S5	S4	S3	S2	S1	S0	0	0	0	0	0
18	M5	M4	M3	M2	M1	M0	S11	S10	S9	S8	S7	S6	S5	S4	S3	S2	S1	S0	0	0	0	0	0	0
17	M4	M3	M2	M1	M0	S11	S10	S9	S8	S7	S6	S5	S4	S3	S2	S1	S0	0	0	0	0	0	0	0
16	M3	M2	M1	M0	S11	S10	S9	S8	S7	S6	S5	S4	S3	S2	S1	S0	0	0	0	0	0	0	0	0
15	M2	M1	M0	S11	S10	S9	S8	S7	S6	S5	S4	S3	S2	S1	S0	0	0	0	0	0	0	0	0	0
14	M1	M0	S11	S10	S9	S8	S7	S6	S5	S4	S3	S2	S1	S0	0	0	0	0	0	0	0	0	0	0
13	M0	S11	S10	S9	S8	S7	S6	S5	S4	S3	S2	S1	S0	0	0	0	0	0	0	0	0	0	0	0
12	S11	S10	S9	S8	S7	S6	S5	S4	S3	S2	S1	S0	0	0	0	0	0	0	0	0	0	0	0	0
11	S10	S9	S8	S7	S6	S5	S4	S3	S2	S1	S0	0	0	0	0	0	0	0	0	0	0	0	0	0
10	S9	S8	S7	S6	S5	S4	S3	S2	S1	S0	0	0	0	0	0	0	0	0	0	0	0	0	0	0
9	S8	S7	S6	S5	S4	S3	S2	S1	S0	0	0	0	0	0	0	0	0	0	0	0	0	0	0	0

OUTPUT FORMATS SSI, MSB oriented, Multiturn (not scaleable)

Clock pulse	1	2	3	4	5	6	7	8	9	10	11	12	13	14	15	16	17	18	19	20	21	22	23	24	25	26	27	28	29	30	31	32
Number of data bits 32	M11	M10	M9	M8	M7	M6	M5	M4	M3	M2	M1	M0	S19	S18	S17	S16	S15	S14	S13	S12	S11	S10	S9	S8	S7	S6	S5	S4	S3	S2	S1	S0
32	M10	M9	M8	M7	M6	M5	M4	M3	M2	M1	M0	S20	S19	S18	S17	S16	S15	S14	S13	S12	S11	S10	S9	S8	S7	S6	S5	S4	S3	S2	S1	S0
32	M9	M8	M7	M6	M5	M4	M3	M2	M1	M0	S21	S20	S19	S18	S17	S16	S15	S14	S13	S12	S11	S10	S9	S8	S7	S6	S5	S4	S3	S2	S1	S0
31	M8	M7	M6	M5	M4	M3	M2	M1	M0	S21	S20	S19	S18	S17	S16	S15	S14	S13	S12	S11	S10	S9	S8	S7	S6	S5	S4	S3	S2	S1	S0	0
30	M7	M6	M5	M4	M3	M2	M1	M0	S21	S20	S19	S18	S17	S16	S15	S14	S13	S12	S11	S10	S9	S8	S7	S6	S5	S4	S3	S2	S1	S0	0	0
29	M6	M5	M4	M3	M2	M1	M0	S21	S20	S19	S18	S17	S16	S15	S14	S13	S12	S11	S10	S9	S8	S7	S6	S5	S4	S3	S2	S1	S0	0	0	0
28	M5	M4	M3	M2	M1	M0	S21	S20	S19	S18	S17	S16	S15	S14	S13	S12	S11	S10	S9	S8	S7	S6	S5	S4	S3	S2	S1	S0	0	0	0	0
27	M4	M3	M2	M1	M0	S21	S20	S19	S18	S17	S16	S15	S14	S13	S12	S11	S10	S9	S8	S7	S6	S5	S4	S3	S2	S1	S0	0	0	0	0	0
26	M3	M2	M1	M0	S21	S20	S19	S18	S17	S16	S15	S14	S13	S12	S11	S10	S9	S8	S7	S6	S5	S4	S3	S2	S1	S0	0	0	0	0	0	0
25	M2	M1	M0	S21	S20	S19	S18	S17	S16	S15	S14	S13	S12	S11	S10	S9	S8	S7	S6	S5	S4	S3	S2	S1	S0	0	0	0	0	0	0	0
24	M1	M0	S21	S20	S19	S18	S17	S16	S15	S14	S13	S12	S11	S10	S9	S8	S7	S6	S5	S4	S3	S2	S1	S0	0	0	0	0	0	0	0	0
23	M0	S21	S20	S19	S18	S17	S16	S15	S14	S13	S12	S11	S10	S9	S8	S7	S6	S5	S4	S3	S2	S1	S0	0	0	0	0	0	0	0	0	0
22	S21	S20	S19	S18	S17	S16	S15	S14	S13	S12	S11	S10	S9	S8	S7	S6	S5	S4	S3	S2	S1	S0	0	0	0	0	0	0	0	0	0	0
21	S20	S19	S18	S17	S16	S15	S14	S13	S12	S11	S10	S9	S8	S7	S6	S5	S4	S3	S2	S1	S0	0	0	0	0	0	0	0	0	0	0	0
20	S19	S18	S17	S16	S15	S14	S13	S12	S11	S10	S9	S8	S7	S6	S5	S4	S3	S2	S1	S0	0	0	0	0	0	0	0	0	0	0	0	0
19	S18	S17	S16	S15	S14	S13	S12	S11	S10	S9	S8	S7	S6	S5	S4	S3	S2	S1	S0	0	0	0	0	0	0	0	0	0	0	0	0	0
18	S17	S16	S15	S14	S13	S12	S11	S10	S9	S8	S7	S6	S5	S4	S3	S2	S1	S0	0	0	0	0	0	0	0	0	0	0	0	0	0	0
17	S16	S15	S14	S13	S12	S11	S10	S9	S8	S7	S6	S5	S4	S3	S2	S1	S0	0	0	0	0	0	0	0	0	0	0	0	0	0	0	0
16	S15	S14	S13	S12	S11	S10	S9	S8	S7	S6	S5	S4	S3	S2	S1	S0	0	0	0	0	0	0	0	0	0	0	0	0	0	0	0	0
15	S14	S13	S12	S11	S10	S9	S8	S7	S6	S5	S4	S3	S2	S1	S0	0	0	0	0	0	0	0	0	0	0	0	0	0	0	0	0	0
14	S13	S12	S11	S10	S9	S8	S7	S6	S5	S4	S3	S2	S1	S0	0	0	0	0	0	0	0	0	0	0	0	0	0	0	0	0	0	0
13	S12	S11	S10	S9	S8	S7	S6	S5	S4	S3	S2	S1	S0	0	0	0	0	0	0	0	0	0	0	0	0	0	0	0	0	0	0	0
12	S11	S10	S9	S8	S7	S6	S5	S4	S3	S2	S1	S0	0	0	0	0	0	0	0	0	0	0	0	0	0	0	0	0	0	0	0	0
11	S10	S9	S8	S7	S6	S5	S4	S3	S2	S1	S0	0	0	0	0	0	0	0	0	0	0	0	0	0	0	0	0	0	0	0	0	0
10	S9	S8	S7	S6	S5	S4	S3	S2	S1	S0	0	0	0	0	0	0	0	0	0	0	0	0	0	0	0	0	0	0	0	0	0	0
9	S8	S7	S6	S5	S4	S3	S2	S1	S0	0	0	0	0	0	0	0	0	0	0	0	0	0	0	0	0	0	0	0	0	0	0	0

TECHNICAL DATASHEET

Absolute Encoder AC 58 - SSI-P

OUTPUT FORMAT SSI, tree format

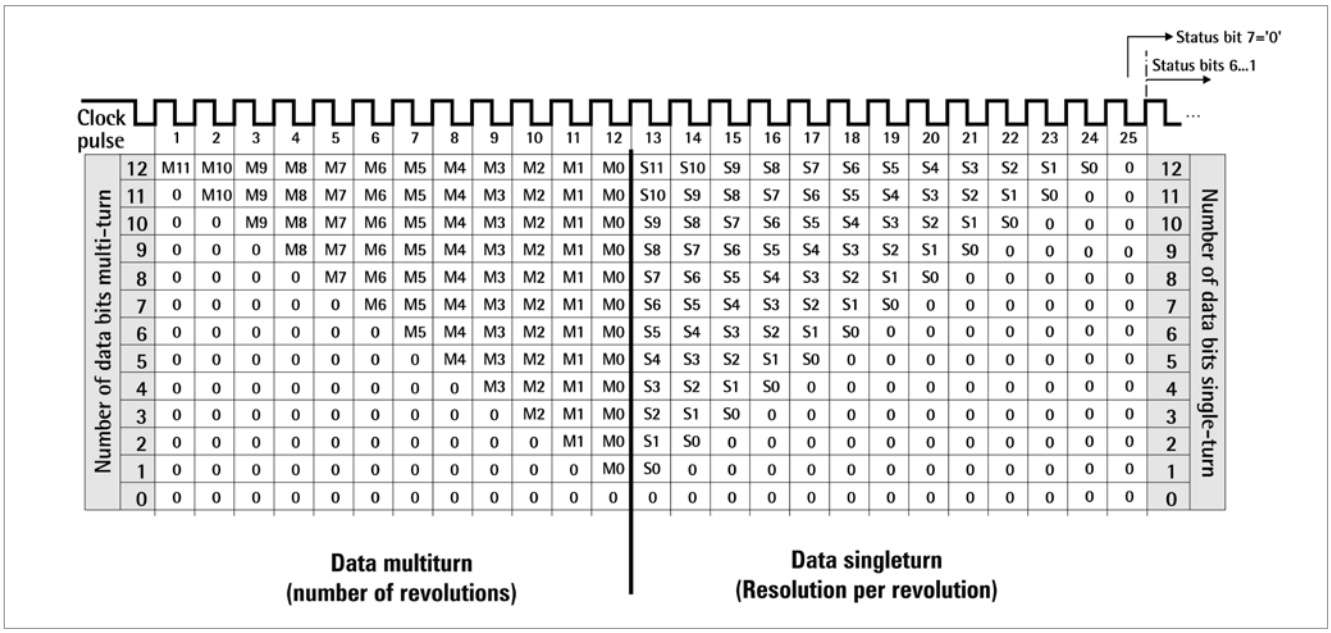

Clock pulse	1	2	3	4	5	6	7	8	9	10	11	12	13	14	15	16	17	18	19	20	21	22	23	24	25	
12	M11	M10	M9	M8	M7	M6	M5	M4	M3	M2	M1	M0	S11	S10	S9	S8	S7	S6	S5	S4	S3	S2	S1	S0	0	12
11	0	M10	M9	M8	M7	M6	M5	M4	M3	M2	M1	M0	S10	S9	S8	S7	S6	S5	S4	S3	S2	S1	S0	0	0	11
10	0	0	M9	M8	M7	M6	M5	M4	M3	M2	M1	M0	S9	S8	S7	S6	S5	S4	S3	S2	S1	S0	0	0	0	10
9	0	0	0	M8	M7	M6	M5	M4	M3	M2	M1	M0	S8	S7	S6	S5	S4	S3	S2	S1	S0	0	0	0	0	9
8	0	0	0	0	M7	M6	M5	M4	M3	M2	M1	M0	S7	S6	S5	S4	S3	S2	S1	S0	0	0	0	0	0	8
7	0	0	0	0	0	M6	M5	M4	M3	M2	M1	M0	S6	S5	S4	S3	S2	S1	S0	0	0	0	0	0	0	7
6	0	0	0	0	0	0	M5	M4	M3	M2	M1	M0	S5	S4	S3	S2	S1	S0	0	0	0	0	0	0	0	6
5	0	0	0	0	0	0	0	M4	M3	M2	M1	M0	S4	S3	S2	S1	S0	0	0	0	0	0	0	0	0	5
4	0	0	0	0	0	0	0	0	M3	M2	M1	M0	S3	S2	S1	S0	0	0	0	0	0	0	0	0	0	4
3	0	0	0	0	0	0	0	0	0	M2	M1	M0	S2	S1	S0	0	0	0	0	0	0	0	0	0	0	3
2	0	0	0	0	0	0	0	0	0	0	M1	M0	S1	S0	0	0	0	0	0	0	0	0	0	0	0	2
1	0	0	0	0	0	0	0	0	0	0	0	M0	S0	0	0	0	0	0	0	0	0	0	0	0	0	1
0	0	0	0	0	0	0	0	0	0	0	0	0	0	0	0	0	0	0	0	0	0	0	0	0	0	0

ELECTRICAL CONNECTIONS
M23 connector (Conin), 12 pole / cable

Cable Colour	M23 (Conin) Pin	Signal
green	1	$\overline{\text{Clock}}$
yellow	2	Clock
pink	3	Data
grey	4	$\overline{\text{Data}}$
brown	5	RS 232 TxD
white	6	RS 232 RxD
black	7	0 V-signal output
blue	8	$\overline{\text{Direction}}$
red	9	Preset 1
violet	10	Preset 2
white [1]	11	DC 10 - 30 V
brown [1]	12	0 V (supply voltage)

[1] bigger cross section 0.5 mm [2]

TECHNICAL DATASHEET

Absolute Encoder AC 58 - SSI-P

DIMENSIONED DRAWINGS

Synchro flange "S"

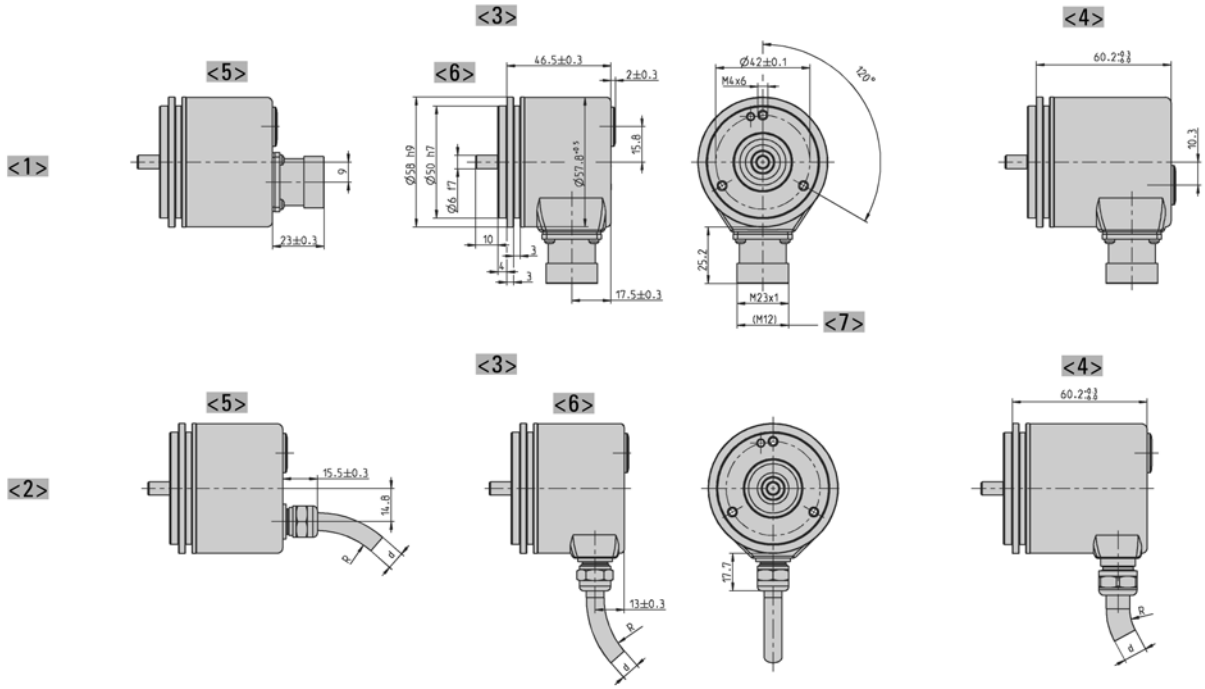

<1> Connection M23 (Conin)
<2> Connection cable
<3> Interface: BiSS, SSI, ST-Parallel
<4> Interface: MT-Parallel (only with cable), Fieldbus, SSI-P
<5> axial
<6> radial
<7> Value in brackets alternative at SSI

Cable bending radius R for flexible installation ≥ 15 x cable diameter
Cable bending radius R for fixed installation ≥ 7.5 x cable diameter
Cable Ø d BiSS/SSI/SSI-P: 7,1 +1,2
Cable Ø d ST-P: 7,8 +0,9
Cable Ø d MT-P: 9,3 +1,3
Cable Ø d Fieldbus: 7,1 +1,2

Dimensions in mm

TECHNICAL DATASHEET

Absolute Encoder AC 58 - SSI-P

DIMENSIONED DRAWINGS (continued)

Clamping flange "K"

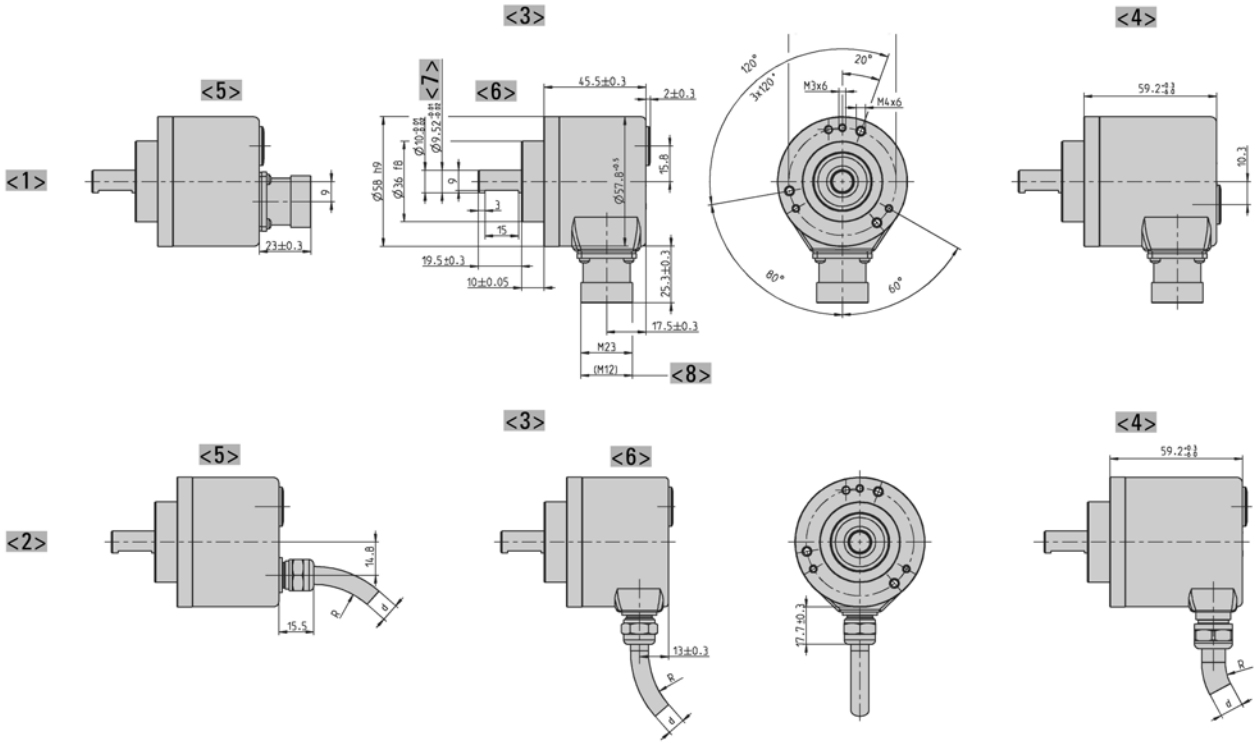

<1> Connection M23 (Conin)
<2> Connection cable
<3> Interface: BiSS, SSI, ST-Parallel
<4> Interface: MT-Parallel (only with cable), Fieldbus, SSI-P
<5> axial
<6> radial
<7> alternative

<8> Value in brackets alternative at SSI
Cable bending radius R for flexible installation ≥ 15 x cable diameter
Cable bending radius R for fixed installation ≥ 7.5 x cable diameter
Cable Ø d BiSS/SSI/SSI-P: 7,1 $^{+1,2}$
Cable Ø d ST-P: 7,8 $^{+0,9}$
Cable Ø d MT-P: 9,3 +1,3
Cable Ø d Fieldbus: 7,1 $^{+1,2}$

Dimensions in mm

TECHNICAL DATASHEET

Absolute Encoder AC 58 - SSI-P

DIMENSIONED DRAWINGS (continued)

Hollow shaft "F"

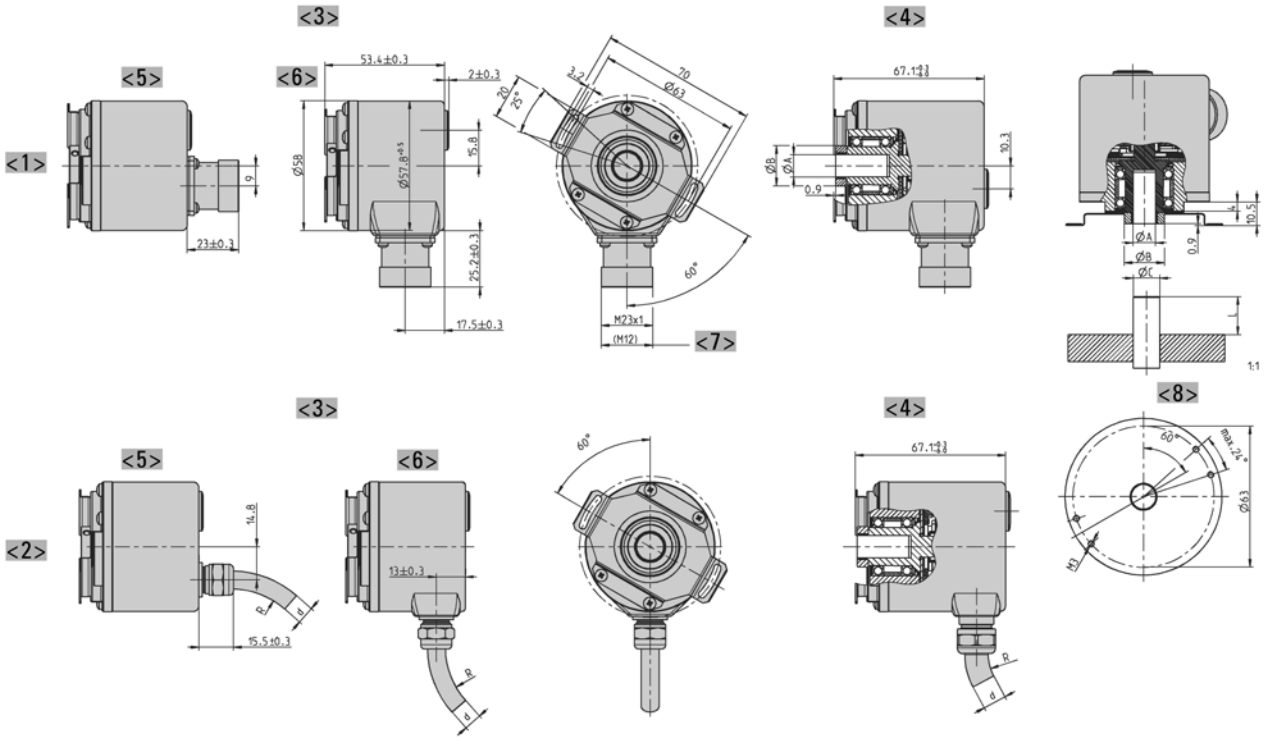

	Dim.				Unit
Hollow shaft Ø A	10 +0.012	12 +0.012	9,52 +0.012	12,7 +0.012	mm
Connecting shaft Ø C	10 g7	12 g7	9,52 g7	12,7 g7	mm
Clamping ring Ø B	18	20	18	22	mm
L_{min}	15	18	15	18	mm
L_{max}	20	20	20	20	mm
Shaft code	"2"	"7"	"6"	"E"	
L = Inside length of connection shaft					

<1> Connection M23 (Conin)
<2> Connection cable
<3> Interface: BiSS, SSI, ST-Parallel
<4> Interface: MT-Parallel (only with cable), Fieldbus, SSI-P
<5> axial
<6> radial
<7> Value in brackets alternative at SSI
<8> Customer side
Cable bending radius R for flexible installation ≥ 15 x cable diameter
Cable bending radius R for fixed installation ≥ 7.5 x cable diameter
Cable Ø d BiSS/SSI/SSI-P: 7,1 +1,2
Cable Ø d ST-P: 7,8 +0,9
Cable Ø d MT-P: 9,3 +1,3
Cable Ø d Fieldbus: 7,1 +1,2

Dimensions in mm

TECHNICAL DATASHEET

Absolute Encoder AC 58 - SSI-P

DIMENSIONED DRAWINGS (continued)

Square flange "Q"

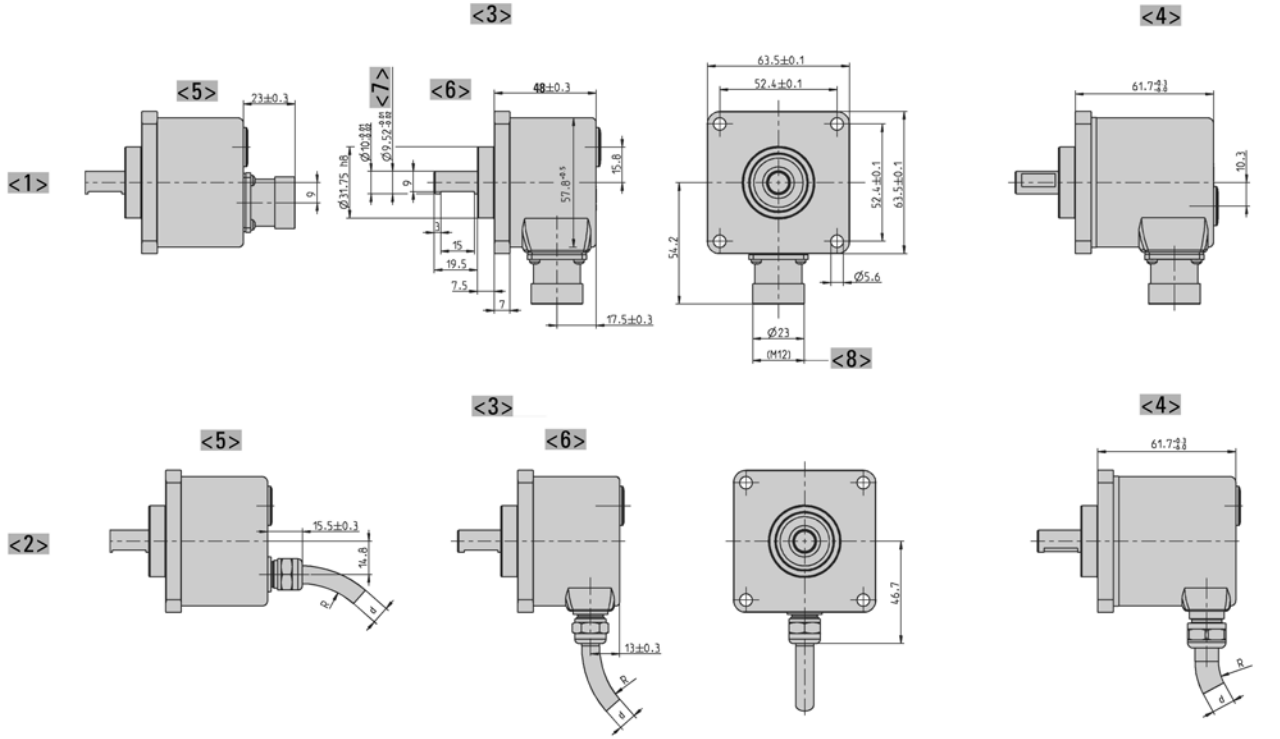

<1> Connection M23 (Conin)
<2> Connection cable
<3> Interface: BiSS, SSI, ST-Parallel
<4> Interface: MT-Parallel (only with cable), Fieldbus, SSI-P
<5> axial
<6> radial
<7> alternative

<8> Value in brackets alternative at SSI
Cable bending radius R for flexible installation ≥ 15 x cable diameter
Cable bending radius R for fixed installation ≥ 7.5 x cable diameter
Cable Ø d BiSS/SSI/SSI-P: 7,1 $^{+1,2}$
Cable Ø d ST-P: 7,8 $^{+0,9}$
Cable Ø d MT-P: 9,3 +1,3
Cable Ø d Fieldbus: 7,1 $^{+1,2}$

Dimensions in mm

TECHNICAL DATASHEET

Absolute Encoder AC 58 - SSI-P

ORDERING INFORMATION

Type	Resolution	Supply voltage	Flange, Protection, Shaft [1, 2]	Interface	Connection
AC58	**0010** 10 Bit ST **0012** 12 Bit ST **0013** 13 Bit ST **0014** 14 Bit ST **0017** 17 Bit ST **1212** 12 Bit MT + 12 Bit ST **1213** 12 Bit MT + 13 Bit ST **1214** 12 Bit MT + 14 Bit ST **1217** 12 Bit MT + 17 Bit ST higher resolution on request	**E** DC 10 - 30 V	**S.41 Synchro, IP64, 6 mm** **S.71 Synchro, IP67, 6 mm** **K.42 Clamping, IP64, 10 mm** **K.46** Clamping, IP64, 9.52 mm **K.72 Clamping, IP67, 10 mm** **K.76** Clamping, IP67, 9.52 mm **F.46** Spring tether, IP64, hubshaft 9.52 mm, mounting with clamping ring front **F.42 Spring tether, IP64, hubshaft 10 mm, mounting with clamping ring front** **F.47 Spring tether, IP64, hubshaft 12 mm, mounting with clamping ring front** **Q.46** Square, IP64, 9.52 mm **Q.42** Square, IP64, 10 mm **Q.76** Square, IP67, 9.52 mm **Q.72** Square, IP67, 10 mm	**SP** SSI programmable	**G** M23 connector (Conin), 12 pole, axial, ccw **H** M23 connector (Conin), 12 pole, radial, ccw

[1] Protection class IP67 not available in combination with preset key and LED display
[2] IP67 on cover with connector only if IP67 mating connector mounted properly.

Preferably available versions are printed in bold type.

TECHNICAL DATASHEET

Absolute Encoder AC 58 - SSI-P
Accessories

FLEXIBLE COUPLINGS


Bellows coupling


Disk coupling


Helical coupling


Isolated disk coupling

		Ordering code
Bellows coupling	10 mm / 10 mm	3 520 037
Bellows coupling	6 mm / 6 mm	3 520 068
Bellows coupling	8 mm / 10 mm	3 520 077
Disk coupling	6 mm / 6 mm	0 070 663
Helical coupling 19/28	5 mm / 6 mm	3 520 035
Helical coupling 19/28	6 mm / 6 mm	0 070 653
Helical coupling 19/28	6 mm / 6.35 mm	3 520 051
Helical coupling 25/32	6 mm / 9.53 mm	3 520 052
Helical coupling 25/32	6 mm / 10 mm	3 520 066
Helical coupling 25/32	10 mm / 12 mm	3 520 065
Helical coupling 25/32	10 mm / 10 mm	3 520 074
Isolated disk coupling	6 mm / 6 mm	3 520 081
Isolated disk coupling	6 mm / 10 mm	3 520 082
Isolated disk coupling	10 mm / 10 mm	3 520 088

MOUNTING

	Ordering code
Clamping eccentric, For M4 (set of three)	1 522 300
Clamping eccentric for synchro flange, d6,5 for M3 (set of three)	0 070 655
Fastening angle (plastic), for clamping flange RI 58, AC 58 (fastening material included)	1 522 329
Mounting bell (plastic), for synchro flange RI 58, AC 58 (clamping eccentric and fastening material included)	1 522 330
Square flange adapter 58 x 58 mm, for clamping flange RI 58, AC 58 (fastening material included)	1 522 326
Square flange adapter 80 x 80 mm, for clamping flange RI 58, AC 58 (fastening material included)	1 522 327
Synchro flange adapter , for clamping flange RI 58, AC 58 (fastening material included)	1 522 328
Torque support	1 531 188

CONNECTING CABLES

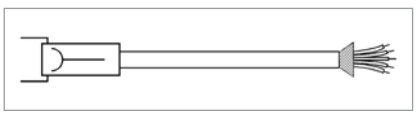

Connecting cables with plug (socket) on one end	Ordering code
M23 (Conin), 12 pole, TPE cable, ccw, mating connector for connection G/H, 3 m	1 543 002
M23 (Conin), 12 pole, TPE cable, ccw, mating connector for connection G/H, 5 m	1 543 003
M23 (Conin), 12 pole, TPE cable, ccw, mating connector for connection G/H, 10 m	1 543 004
M23 (Conin), 12 pole, TPE cable, ccw, mating connector for connection G/H, 15 m	1 543 005
M23 (Conin), 12 pole, TPE cable, ccw, mating connector for connection G/H, 20 m	1 543 006
M23 (Conin), 12 pole, TPE cable, ccw, mating connector for connection G/H, 25 m	1 543 007
M23 (Conin), 12 pole, TPE cable, ccw, mating connector for connection G/H, 30 m	1 543 008

TECHNICAL DATASHEET

Absolute Encoder AC 58 - SSI-P
Accessories

CONNECTING CABLES (continued)

Connecting cables with plug (socket) on one end	Ordering code
M23 (Conin), 12 pole, TPE cable, ccw, mating connector for connection G/H, 40 m	1 543 015
M23 (Conin), 12 pole, TPE cable, ccw, mating connector for connection G/H, 50 m	1 543 016

CONNECTING CABLES

Cable not made up with connectors	Ordering code
TPE cable, 12-core + screen	3 280 220 + length

DISPLAYS

	Ordering code
Position indicator Signo-SSI	0 727 111

TECHNICAL MANUALS

	Ordering code
Technical manual, English, SSI-P	2 565 289 (or homepage)
Technical manual, German, SSI-P	2 565 287 (or homepage)

SOFTWARE

	Ordering code
Software Win SSI, as download from our homepage	www.hengstler.com
Win SSI PC connecting cable, for M23 (Conin), 12 pole, ccw (suited for supply voltage E and connection G or H)	1 543 010