182.72.104.66UCFGehäuseeinheiten

Housing units UCF204 (Series UCF)

four-bolt flanged housing units, square design, cast iron, grub screws in inner ring, RSR seals

The datasheet is only an overview of dimensions and basic load ratings of the selected product. Please always observe all the guidelines in these overview pages. Further information is given on many products under the menu item "Description". You can also order comprehensive information via the Catalogue selection system (https://www.schaeffler.de/content.schaeffler.de/en/news_media/index.jsp) or by telephone on +49 (91 32) 82 - 28 97.

d	20	mm	
L	86	mm	
U	33,3	mm	
A	25,5	mm	
A_1	12	mm	
A_2	15	mm	
B	31	mm	
J	64	mm	
N	12	mm	
m	0,57	kg	Mass
	F204		Designation, housing
	UC204		Designation, radial insert ball bearing

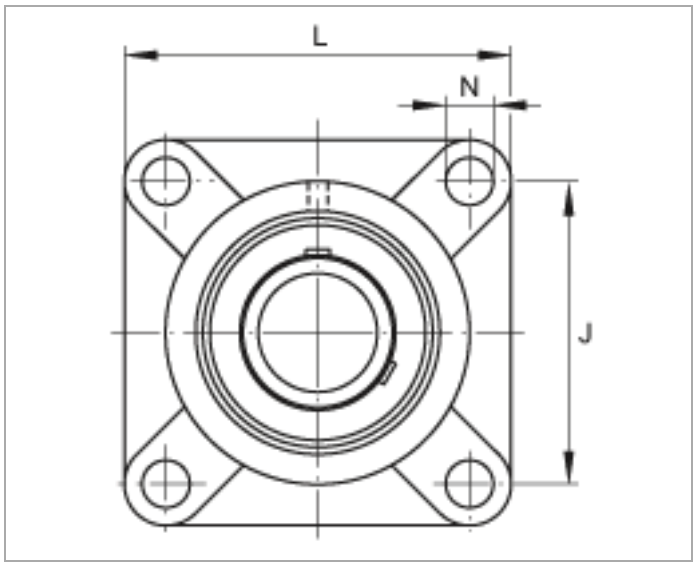
L
N
J

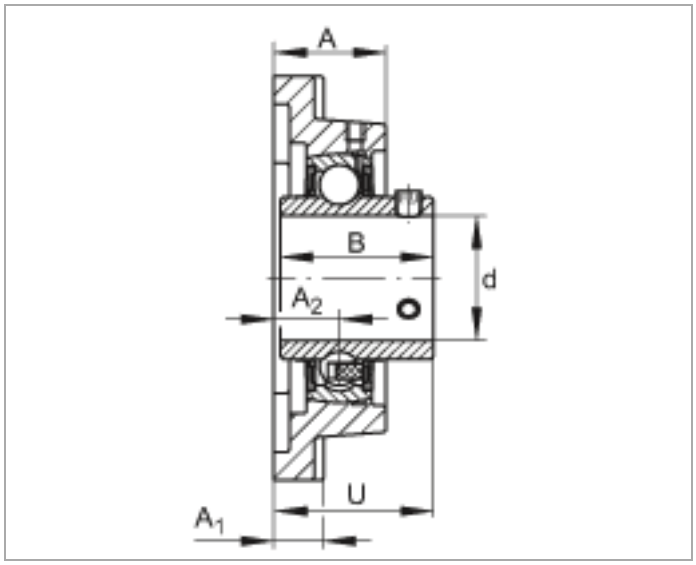
A
B
d
A2
U
A1