IEC Appliance Inlet C14 or C18, Screw-on Mounting, Rear Side, PCB terminals



C14 C18



70° C



70° C

See below:
Approvals and Compliances

Description

- Panel mount , Screw-on mounting rear-side
- 1 Function :
  Appliance Inlet , Pin temperature 70 °C , protection class I or II
- V-Lock notch standard
- For PCB mounting

Other versions on request

- Article with enhanced glow wire resistance according IEC 60695-2-11 or -12 & -13
- Ground terminal with quick-connect terminal 6,3 x 0,8 mm
- With solder terminals

Weblinks

pdf data sheet, html datasheet, General Product Information, Approvals, Distributor-Stock-Check, Accessories, Detailed request for product

Technical Data

Ratings IEC	10 A / 250 VAC; 50 Hz
Ratings UL/CSA	15 A / 250 VAC; 60 Hz
Dielectric Strength	> 3 kVAC between L-N > 3 kVAC between L/N-PE (1 min/50 Hz)
Allowable Operation Temperature	-25 °C to 70 °C
IP-Protection	front side IP40 acc. to IEC 60529
Protection against electric shock	Suitable for appliances with protection class I or II acc. to IEC 61140
Terminal	For PCB mounting : Ground terminal: Quick connect terminals 4.8 x 0.8 mm angled or straight Solder terminal on request
Panel Thickness S	Screw: max 3 mm Mounting screw torque max 0.5 Nm
Material: Housing	Thermoplastic, black, UL 94V-0

Appliance inlet/-outlet	C14 / C18 acc. to IEC 60320-1, UL 60320-1, CSA C22.2 no. 60320-1 (for cold conditions) pin-temperature 70 °C, 10 A, Protection Class I or II

Approvals and Compliances

Detailed information on product approvals, code requirements, usage instructions and detailed test conditions can be looked up in Details about Approvals

SCHURTER products are designed for use in industrial environments. They have approvals from independent testing bodies according to national and international standards. Products with specific characteristics and requirements such as required in the automotive sector according to IATF 16949, medical technology according to ISO 13485 or in the aerospace industry can be offered exclusively with customer-specific, individual agreements by SCHURTER.

Approvals

The approval mark is used by the testing authorities to certify compliance with the safety requirements placed on electronic products.

Approval Reference Type: GSP1

Approval Logo	Certificates	Certification Body	Description
10	VDE Approvals	VDE	Certificate Number: 40012767
c UL us	UL Approvals	UL	UL File Number: E96454
CCC	CCC Approvals	CCC	CCC Certificate Number: 2020180204014251, 2020180204014252

Product standards

Product standards that are referenced

Organization	Design	Standard	Description
IEC	Designed according to	IEC 60320-1	Appliance couplers for household and similar general purposes
UL	Designed according to	UL 60320-1	Standard for Attachment Plugs and Receptacles
CSA Group	Designed according to	CSA C22.2 no. 60320-1	General Use Receptacles, Attachment Plugs, and Similar Wiring Devices

Application standards

Application standards where the product can be used

Organization	Design	Standard	Description
IEC	Designed for applications acc.	IEC/UL 62368-1	Audio/video, information and communication technology equipment - Part 1: Safety requirements

Compliances

The product complies with following Guide Lines

Identification	Details	Initiator	Description
CE	CE declaration of conformity	SCHURTER AG	The CE marking declares that the product complies with the applicable requirements laid down in the harmonisation of Community legislation on its affixing in accordance with EU Regulation 765/2008.
UKCA	UKCA declaration of conformity	SCHURTER AG	The UKCA marking declares that the product complies with the applicable requirements laid down in the British Amendment of Regulation (EC) 765/2008.
RoHS COMPLIANT	RoHS	SCHURTER AG	Directive RoHS 2011/65/EU, Amendment (EU) 2015/863
China RoHS	China RoHS	SCHURTER AG	The law SJ / T 11363-2006 (China RoHS) has been in force since 1 March 2007. It is similar to the EU directive RoHS.
REACH	REACH	SCHURTER AG	On 1 June 2007, Regulation (EC) No 1907/2006 on the Registration, Evaluation, Authorization and Restriction of Chemicals 1 (abbreviated as "REACH") entered into force.
V-Lock		SCHURTER AG	V-Lock system are based on a matching plug-dose combination. The connector is equipped with a notch intended for use with the latching cordset. The cord latching system prevents against accidental removal of the cordset.

Dimensions [mm]

PIN: Spacing 7 / 7.3mm or 9.05 / 7.3mm

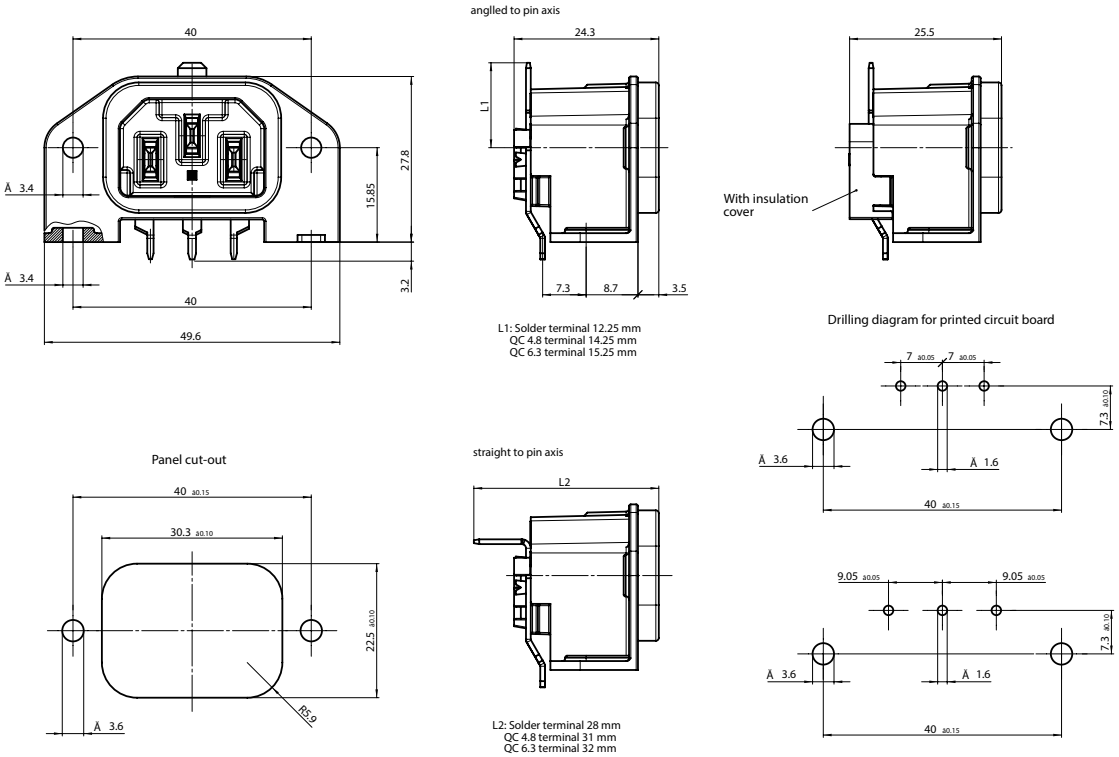

PIN: Spacing 7 / 9.7mm or 9.05 / 9.7mm

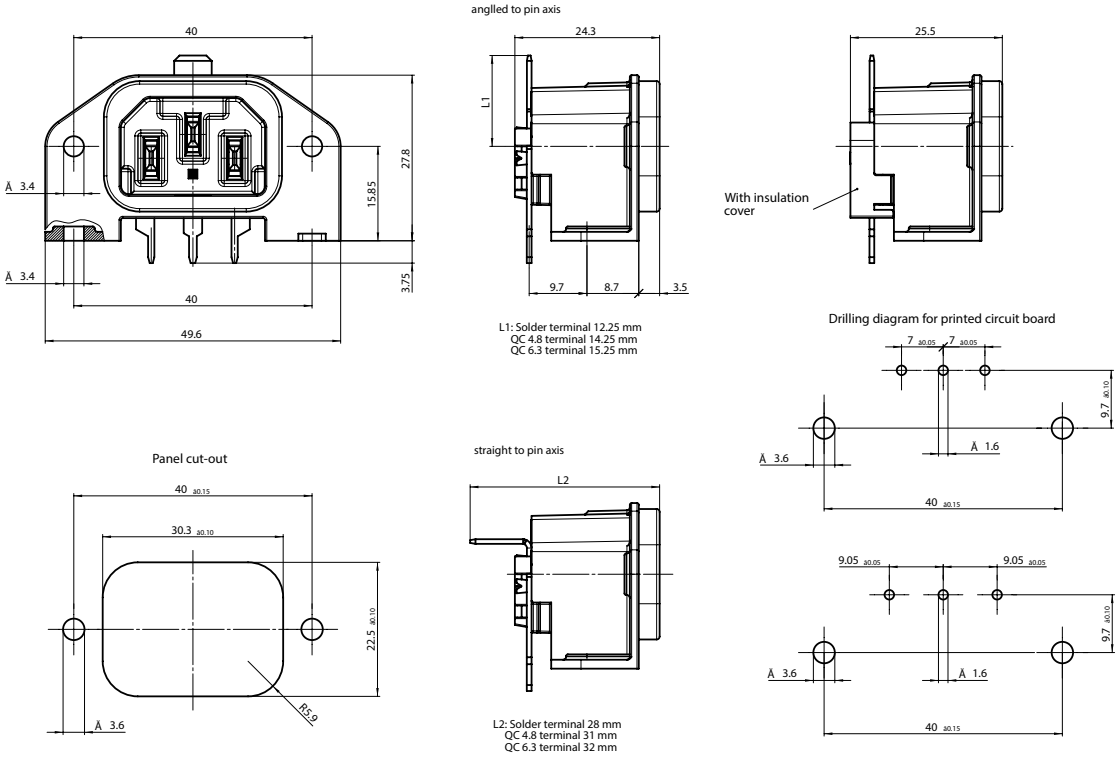

All Variants

Protection Class	PCB terminal spacing	Mounting flange with	Ground terminal 4.8 x 0.8 mm	Cover	Order Number
I	7/7.3	PCB side through holes, panel side pre-inserted nuts	straight	●	GSP1.9413.1
I	7/7.3	holes for screws M3	angled to pin axis		GSP1.9101.1
I	7/7.3	holes for screws M3	straight		GSP1.9103.1
I	7/7.3	holes for screws M3	straight	●	GSP1.9113.1
I	7/7.3	holes for self-tapping screws 3mm, 4 screws enclosed	straight		GSP1.9503.1
I	7/7.3	pre-inserted nuts M3, 4 pcs.	straight		GSP1.9203.1
I	9.05/9.7	PCB side through holes, panel side pre-inserted nuts	angled to pin axis		GSP1.8401.1
I	9.05/9.7	holes for screws M3	angled to pin axis		GSP1.8101.1
I	9.05/9.7	holes for screws M3	angled to pin axis	●	GSP1.8111.1
I	9.05/9.7	holes for screws M3	straight		GSP1.8103.1
I	9.05/9.7	holes for self-tapping screws 3mm, 2 screws enclosed	angled to pin axis		GSP1.8601.1
I	9.05/9.7	holes for self-tapping screws 3mm, 2 screws enclosed	straight	●	GSP1.8613.1
I	9.05/9.7	holes for self-tapping screws 3mm, 4 screws enclosed	angled to pin axis		GSP1.8501.1
I	9.05/9.7	holes for self-tapping screws 3mm, without screws	angled to pin axis		GSP1.8701.1
I	9.05/9.7	pre-inserted nuts M3, 4 pcs.	angled to pin axis		GSP1.8201.1
I	9.05/9.7	pre-inserted nuts M3, 4 pcs.	angled to pin axis	●	GSP1.8211.1
I	9.05/9.7	pre-inserted nuts M3, 4 pcs.	straight		GSP1.8203.1
II	7/7.3	holes for screws M3	-		GSP1.9100.1
II	7/7.3	holes for screws M3	-	●	GSP1.9110.1
II	7/7.3	holes for self-tapping screws 3mm, 4 screws enclosed	-		GSP1.9500.1
II	7/7.3	pre-inserted nuts M3, 4 pcs.	-		GSP1.9200.1
II	9.05/9.7	holes for screws M3	-		GSP1.8100.1
II	9.05/9.7	holes for screws M3	-	●	GSP1.8110.1
II	9.05/9.7	holes for self-tapping screws 3mm, 4 screws enclosed	-		GSP1.8500.1
II	9.05/9.7	pre-inserted nuts M3, 4 pcs.	-		GSP1.8200.1

Most Popular.

Protection Class	PCB terminal spacing	Mounting flange with	Ground terminal 4.8 x 0.8 mm	Cover	Order Number

Availability for all products can be searched real-time:https://www.schurter.com/en/Stock-Check/Stock-Check-SCHURTER

Packaging unit 50 Pcs

Mating Outlets/Connectors



Category / Description

Connector Overview complete

4782 Mounting: Power Cord, 3 x 1 mm² / 3 x 18 AWG, Cable, Connector: IEC C13	4782
4785 Mounting: Power Cord, 3 x 1 mm² / 3 x 18 AWG, Cable, Connector: IEC C13	4785
4300-06 Mounting: Power Cord, 3 x 1 mm² / 3 x 18 AWG, Cable, Connector: IEC C13	4300-06
4781 Mounting: Power Cord, Cable, Connector: IEC C15	4781
4784 Mounting: Power Cord, 3 x 1 mm² / 3 x 18 AWG, Cable, Connector: IEC C15	4784
	...



Interconnection Cord Overview complete

Cord Sets 10 A, Interconnection, 2.0 m, IEC H05VV-F3G1.0, black	6007.0204
Cord Sets 10 A, Interconnection, 1.0 m, Connector IEC C13, H05VV-F3G1.0, black	6007.0212
Cord Sets 10 A, Interconnection, 2.0 m, Connector IEC C13, H05VV-F3G1.0, black	6007.0214



Power Supply Cord Overview complete

Cord Sets 10 A, Europlug, 2.5 m, Connector IEC C13, H05VV-F3G1.0, black	6004.0215
Cord Sets 10 A, Europlug, 2.5 m, Connector IEC C13, H05VV-F3G1.0, black	6003.0215
Cord Sets 10 A, uninsulated wires, 2.0 m, Connector IEC C13, H05VV-F3G1.0, black	6000.0224
Cord Sets 10 A, uninsulated wires, 2.0 m, Connector IEC C13, H05VV-F3G1.0, black	6000.0214
Cord Sets 10 A, United Kingdom, 2.5 m, Connector IEC C13, H05VV-F3G1.0, black	6044.0215
	...



Power Supply or Interconnection Cord Overview complete

Cord Sets 10 A, United Kingdom, 2.0 m, Connector IEC H05VV-F3G1.0, black	6044.0204

Mating Outlets/Connectors shuttered



Connector Overview complete

4783 Mounting: Power Cord, 3 x 1 mm² / 3 x 18 AWG, Cable, Connector: IEC C13	4783



Power Cord Overview complete

VAC13KS, Overview, V-Lock cord retaining, diverse Connector IEC C13, diverse, black	VAC13KS
VAC17KS, V-Lock cord retaining, diverse m, Connector IEC C17, diverse, black / grey / white	VAC17KS

The specifications, descriptions and illustrations indicated in this document are based on current information. All content is subject to modifications and amendments. Information furnished is believed to be accurate and reliable. However, users should independently evaluate the suitability and test each product selected for their own applications.