NOTES
MATERIAL: -DIECAST ALUMINUM ALLOY, -FOUR 6-32 Phillips Screws

VIEW OF BOX (LID REMOVED)

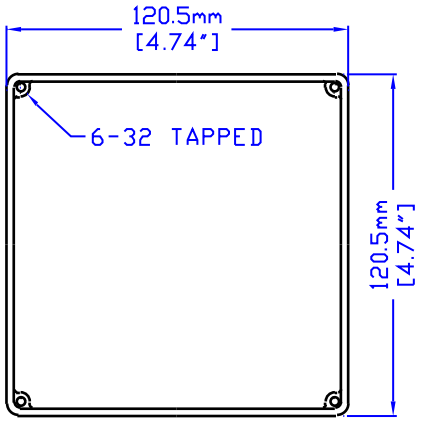

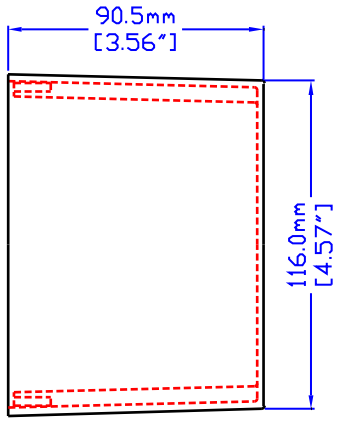

NOTE:
FOR DETAIL DIMENSIONING
REFER TO DRAWING
1590V

VIEW INSIDE LID

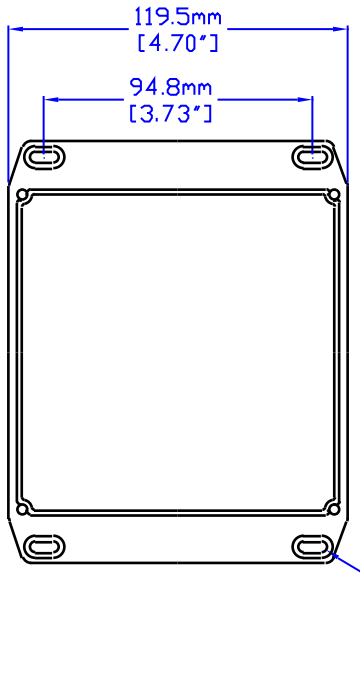

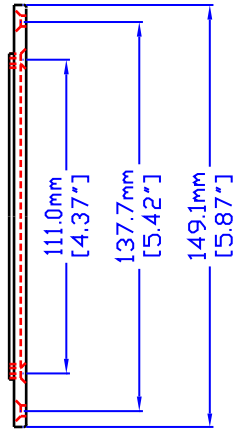

1590VFL

1590V WITH SPECIAL FLANGED LID.
AVAILABLE FROM STOCK.

WATERPROOFING KIT IS AVAILABLE
PART # 1590VG.
THE GASKET KIT WILL AFFORD PROTECTION
AGAINST LIQUID TO NEMA 4 AND IP65 LEVELS.

THIS ENCLOSURE IS ALSO AVAILABLE IN BLACK
AND GRAY TEXTURE FINISH.

HAMMOND MANUFACTURING

1590VFL

CANADA - PH (519) 886 7170 - FAX (519) 886 8311
U.S.A. - PH (716) 631 5700 - FAX (716) 631 1156