E30450

Screw-in adapter for process sensors

ADAPT G1/4A-G1/2A V2A

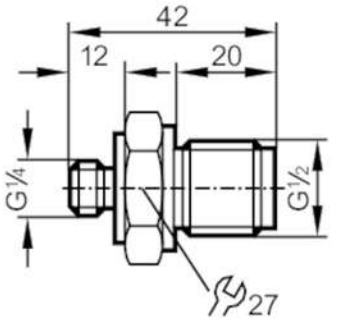

Application		
Medium temperature	[°C]	-40...130
Pressure rating	[bar]	1000
Tests / approvals		
Pressure Equipment Directive		A possible classification to PED depends on the application and has to be carried out by the user / operator.
Pressure Equipment Directive EAC		The adapter is intended for use in devices, machines and installations that do not fall under the categories of the technical rule TR CU 032/2013.
Safety instructions		The compatibility between medium and product material has to be checked in all applications.
Mechanical data		
Weight	[g]	102.5
Materials		stainless steel (1.4305 / 303); Sealing: EPDM
Sensor connection		G 1/4
Process connection		threaded connection G 1/2
Remarks		
Pack quantity		1 pcs.