Technical Data

FB/24

05
2831
DoP0054

	F/012*	F Bell FB/24	F/230*
Nominal Voltage	12Vdc	24Vdc	230Vdc
Voltage Range	9 - 15Vdc	18 - 30Vdc	200 - 250Vac
Current	55 - 65mA	25 - 35mA	20 - 30mA
Sound Pattern	Bell Ring Sound	Bell Ring Sound	Bell Ring Sound
SPL @nominal voltage (@90° to front face)	95dB(A)	95dB(A)	95dB(A)
EN54-3 SPL @28V DC dB(A) (see notes)	N/A	95dB(A)	N/A

*** These products are not EN54-3 certified**

Fire Alarm Device - Sounder for indoor (type A) and outdoor (type B) use

Essential Characteristics

Harmonized Technical Specification: EN54-3:2001+A1:2002+A2:2006

Clause(s)	Performance
4.2, 4.3, 5.2, 5.3	Pass
4.4, 4.5, 4.6, 5.4	Pass
5.5, 5.6, 5.7, 5.8, 5.9	Pass
5.8, 5.9, 5.10	Pass
5.11	Pass
5.12, 5.13, 5.14, 5.15	Pass
5.16	Pass
5.17	Pass

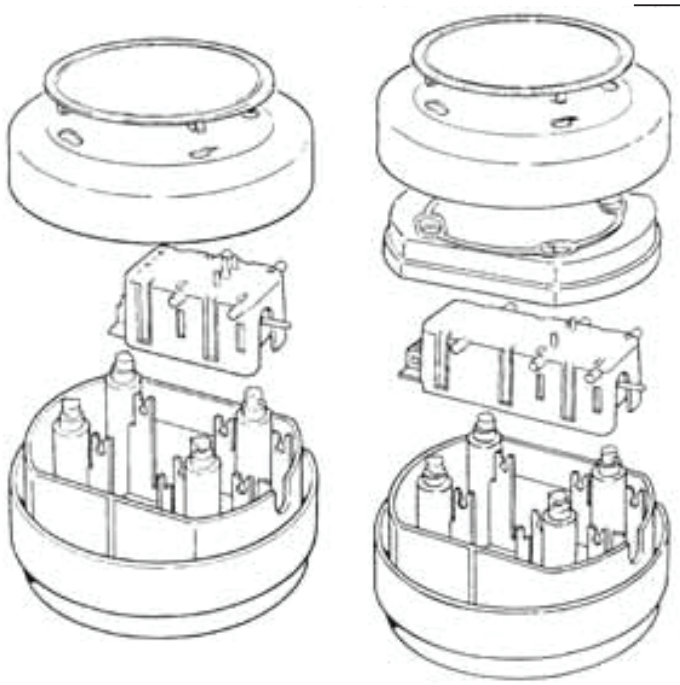

I. EN54-3 measurements shown reflect minimum expected SPL reading at the Loudest Point around the EN54-3 defined sounder axis.

II. All other tone measurements reflect manufactures data, and are not verified by a Notified Body.

III. Detailed EN54-3 polar SPL measurements are available in the Product Manual M05-006.

IV. All other measurements are taken at 20°C operating temperature.

V. Enclosure protection, IP21C, Type A
Weatherproof version, IP33C, Type B

Important note:

The mains version should only be installed by a suitably qualified person.

The mains supply should be isolated before removing the cover. Ensure that the gong fixing screw is refitted after installation. The supply must be wired using cable of no greater than 6A rating and a cross sectional area of 0.75mm^2. The cable must be secured using a suitable cable gland.

A readily accessible disconnect device must be incorporated in the mains supply wiring to this unit. Refer to current wiring regulations.

The unit should be powered via a 1A 250V anit-surge fuse (T1A250V).

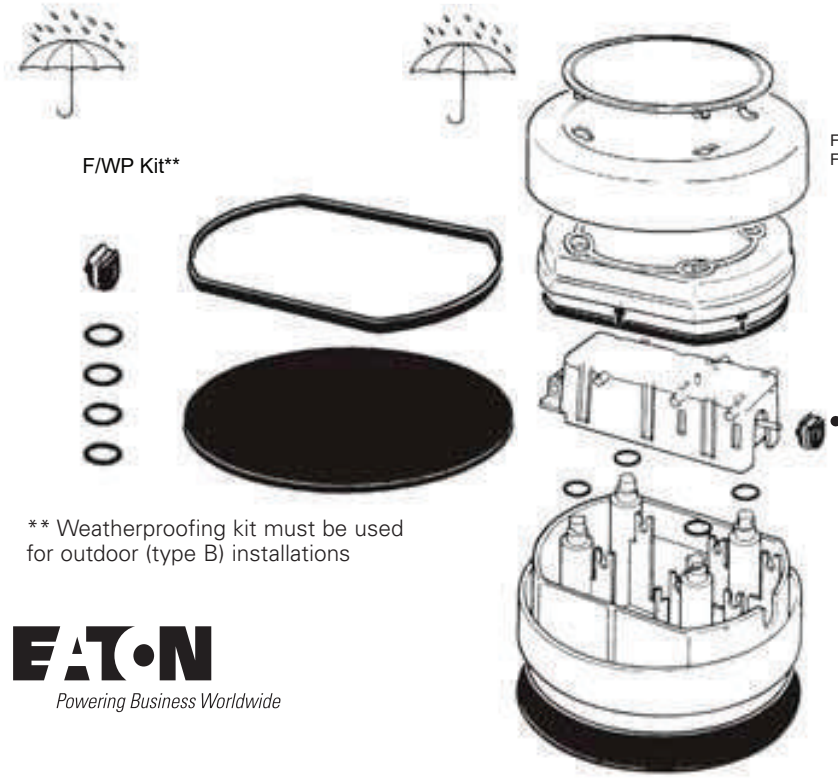

** Weatherproofing kit must be used for outdoor (type B) installations

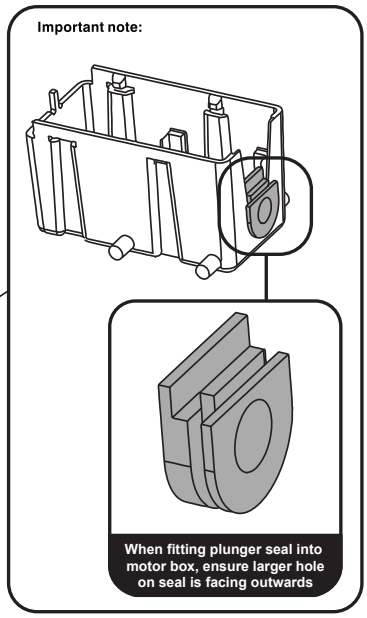

EATON
Powering Business Worldwide

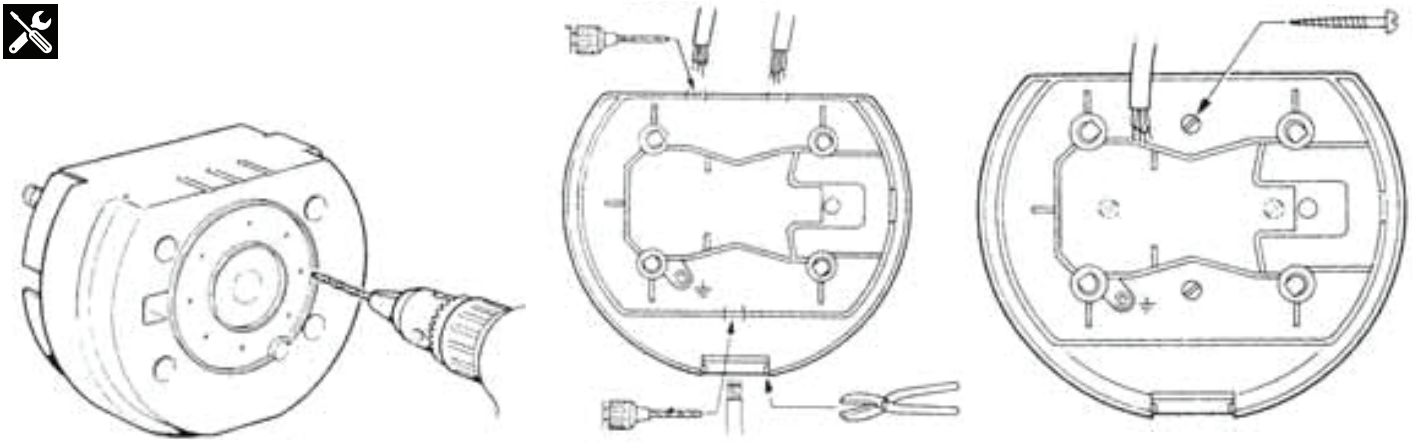

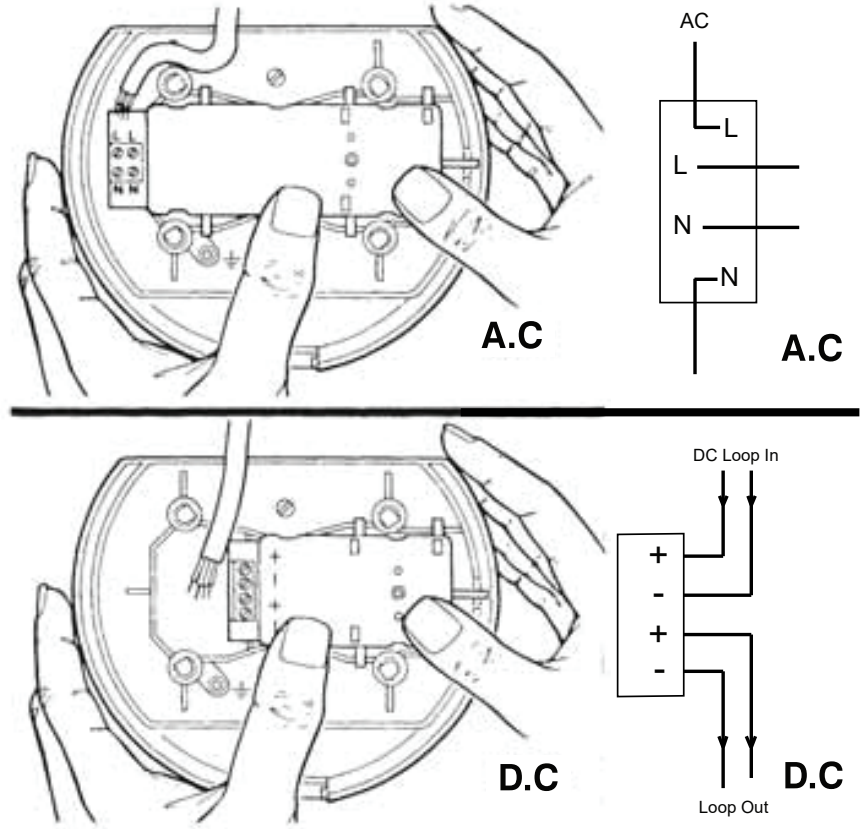

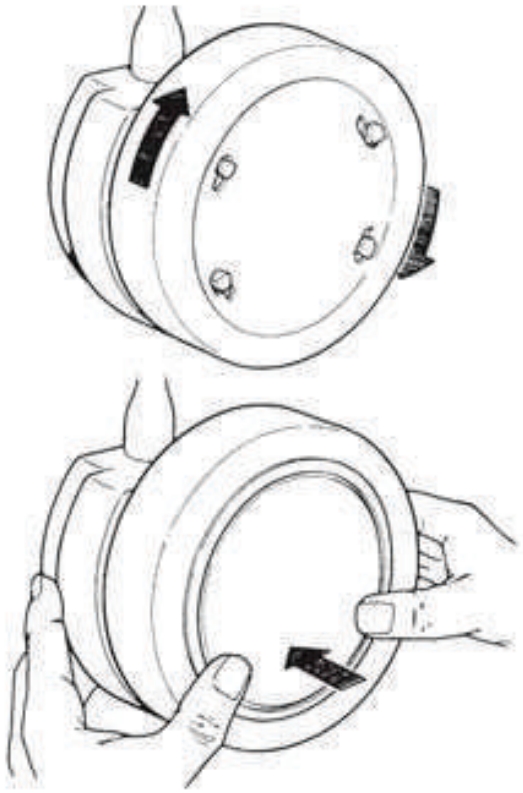

Powering Business Worldwide

Eaton Electrical Products Ltd.
Llantarnam Park
Cwmbran
NP44 3AW
Tel: +44 (0) 1633 628500
Fax: +44 (0) 1633 866346

Eaton
EMEA Headquarters
Route de la Longeraie 7
1110 Morges, Switzerland
Eaton.eu
TEL: +44 (0) 1302 321541
FAX: +44 (0) 1302 303220
Firesales@eaton.com
Firetechsupport@eaton.com

© 2021 Eaton
All Rights Reserved
Eaton is a registered trademark.

All trademarks are property
of their respective owners.
www.Eaton.com