Part Number: **JP-25182-*****
Description: **Small Angled Nose Telecom Clip with Ben of Nails**
3107

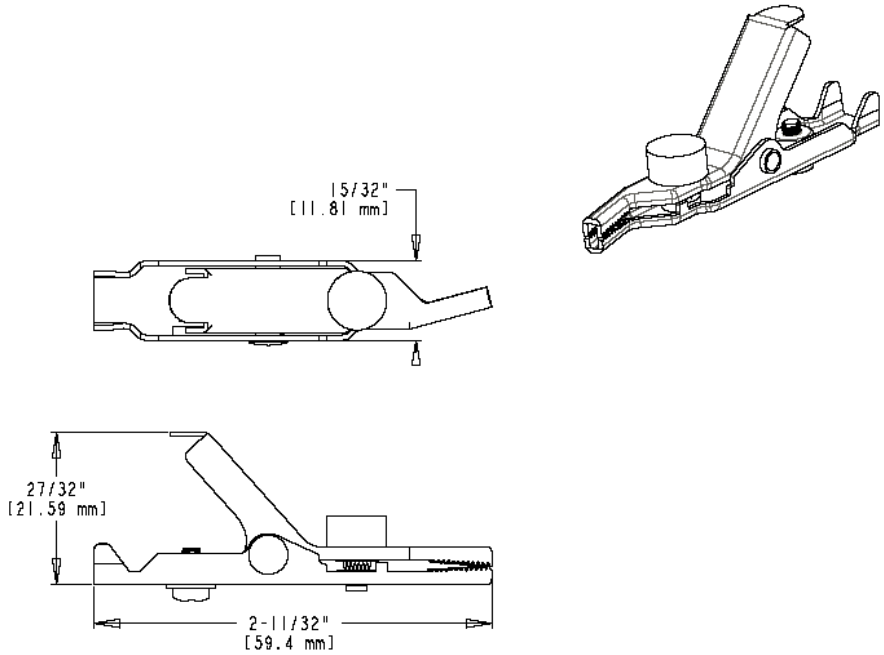

- Small Angled Nose Telecom Clip with Ben of Nails
- Mueller – J.S.Popper brand
- Jaw opens 1.0” (25.4 mm)
- Uses bed of nails to pierce insulation
- Material: nickel-silver jaws; includes brass screw, brass nut, brass washer, and bronze star washer
- Length: 2.34” (59.4 mm)
- Connection Options: -N Without Hardware, -L With Loose Hardware, -J Banana Jack, -TJ Threaded Banana Jack
- RoHS Compliant

Mueller Electric Company
1625 E. 31st Street
Cleveland, Ohio 44114
ISO 9001:2000
Over 95 Years Of Innovation
www.muellerelectric.com
TEL. 800-955-2629
TEL. 216-771-5225
FAX. 216-771-3068