Keysight Technologies
34405A Multimeter
5.5 Digit Dual Display, Benchtop DMM

Data Sheet



KEYSIGHT TECHNOLOGIES

Features

- 120000 counts resolution
- 16 built-in measurement functions including temperature and capacitance
- 0.025% 1-year DC voltage accuracy
- USB 2.0
- SCPI compatible
- Keysight IO Library Suite and DMM Intuilink connectivity software included

Affordable and Feature Rich Measurement Tool

With the 34405A digital multimeter, you get all the tools you need at an affordable price without compromising the quality Keysight Technologies, Inc. products are known for. It provides a broad range of features and measurement functions such as DC voltage, DC current, true-RMS AC voltage and AC current, 2-wire resistance, frequency, diode test and continuity which are designed to meet general industrial needs. Furthermore, it can measure temperature ranging from –80 °C to 150 °C. The true value is more evident with its capability to measure capacitance ranging from 1000 pF to 10000 µF. Keysight 34405A also improves efficiency and accuracy with its six built-in math operations: Null, dBm, dB, MinMax, Limit and Hold.

Quick Connection to the PC with USB 2.0 Interface

For those with a need to control and take preset measurements with a PC, the built-in USB 2.0 interface provides an easy and robust connection between the PC and DMM. The USB interface connects directly to the PC host and works seamlessly with Keysight Connectivity software and can be controlled remotely via industry standard SCPI commands or through DMM Intuilink Connectivity software. IVI-COM and LabVIEW drivers are included to ensure an easy integration with different programming environments.

Bright Display, Fast Reading Speed and Configuration Storage

When high throughput and productivity are the priority, Keysight 34405A VFD dual display feature allows users to take more than one measurement and display them simultaneously on the front panel. For speed critical applications, Keysight 34405A can take up to 19 readings/sec at 4.5 digits resolution directly to the PC. In addition, the user can configure and store complete instrument setups and recall them at anytime from any of the four built-in storing states.

Rugged and Reliable

The 34405A is designed and tested according to major Safety and Regulatory Standards. In addition, the shock absorbing bumpers is designed to prevent physical damage from your day-to-day use.

You can watch 34405A in action on your PC by downloading the interactive demo from the 34405A homepage at www.keysight.com/find/34405a

Go to the WEB for more information on Keysight's DMM. Visit www.keysight.com

DC Characteristics [1]

				ACCURACY ± (% of reading + % of range)	
FUNCTION	RANGE[2]	TEST CURRENT OR BURDEN VOLTAGE	INPUT IMPEDANCE[3]	1 Year 23 °C ± 5 °C	Temperature Coefficient 0 °C - 18 °C 28 °C - 55 °C
VOLTAGE	100.000 mV	-	10.0 MΩ ±2%	0.025+0.008	0.0015+0.0005
	1.00000 V	-	10.0 MΩ ±2%	0.025+0.006	0.0010+0.0005
	10.0000 V	-	10.1 MΩ ±2%	0.025+0.005	0.0020+0.0005
	100.000 V	-	10.1 MΩ ±2%	0.025+0.005	0.0020+0.0005
	1000.00 V	-	10.0 MΩ ±2%	0.025+0.005	0.0015+0.0005
RESISTANCE	100.000 Ω	1.0 mA	–	0.05+0.008[3]	0.0060+0.0008
	1.00000 kΩ	0.83 mA	–	0.05+0.005[3]	0.0060+0.0005
	10.0000 kΩ	100 µA	–	0.05+0.006[3]	0.0060+0.0005
	100.000 kΩ	10.0 µA	–	0.05+0.007	0.0060+0.0005
	1.00000 MΩ	900 nA	–	0.06+0.007	0.0060+0.0005
	10.0000 MΩ	205 nA	–	0.25+0.005	0.0250+0.0005
	100.000 MΩ	205 nA‖10 MΩ	–	2.00+0.005	0.3000+0.0005
CURRENT	10.0000 mA	< 0.2 V	–	0.05+0.015	0.0055+0.0005
	100.000 mA	< 0.2 V	–	0.05+0.005	0.0055+0.0005
	1.00000 A	< 0.5 V	–	0.20+0.007	0.0100+0.0005
	10.0000 A	< 0.6 V	–	0.25+0.007	0.0150+0.0005
CONTINUITY	1000 Ω	0.83 mA	–	0.05+0.005	0.0050+0.0005
DIODE TEST[4]	1.0000 V	0.83 mA	–	0.05+0.005	0.0050+0.0005

AC Characteristics [1]

			ACCURACY ± (% of reading + % of range)	
FUNCTION	RANGE[5]	FREQUENCY	1 Year 23 °C ± 5 °C	Temperature Coefficient 0 °C - 18 °C 28 °C - 55 °C
TRUE-RMS AC VOLTAGE[6]	100.000 mV	20 Hz - 45 Hz	1.0+0.1	0.02+0.02
		45 Hz - 10 kHz	0.2+0.1	0.02+0.02
		10 kHz - 30 kHz	1.5+0.3	0.05+0.02
		30 kHz - 100 kHz[7]	5.0+0.3	0.10+0.02
	1.00000 V to 750.00 V	20 Hz - 45 Hz	1.0+0.1[14]	0.02+0.02
		45 Hz - 10 kHz	0.2+0.1	0.02+0.02
		10 kHz - 30 kHz	1.0+0.1	0.05+0.02
		30 kHz - 100 kHz[7]	3.0+0.2[15]	0.10+0.02
TRUE-RMS AC CURRENT[8]	10.0000 mA to 10.0000 A	20 Hz - 45 Hz	1.5+0.1	0.02+0.02
		45 Hz - 1 kHz	0.5+0.1	0.02+0.02
		1 kHz - 10 kHz[9]	2.0+0.2	0.02+0.02

AC Characteristics [1]

			ACCURACY ± (% of reading + % of range)	
FUNCTION	RANGE[5]	FREQUENCY	1 Year 23 °C ± 5 °C	Temperature Cefficient 0 °C - 18 °C 28 °C - 55 °C
FREQUENCY [10,16]	100.000 mV to 750.00 V	< 2 Hz[17]	0.18+0.003	0.005
		< 20 Hz	0.04+0.003	0.005
		20 Hz - 100 kHz[11]	0.02+0.003	0.005
		100 kHz ~ 300 kHz[12]	0.02+0.003	0.005
	10.0000 mA to 10.0000 A	< 2 Hz[17]	0.18+0.003	0.005
		< 20 Hz	0.04+0.003	0.005
		20 Hz ~ 10 kHz[11]	0.02+0.003	0.005

Temperature and Capacitance Characteristics [1]

			ACCURACY ± (% of reading + % of range)	
FUNCTION	RANGE	TEST CURRENT, etc.	1 Year 23 °C ± 5 °C	Temperature Cefficient 0 °C - 18 °C 28 °C - 55 °C
TEMPERATURE	–80 °C - 150 °C	5 kΩ thermistor probe	Probe accuracy + 0.2 °C	0.002 °C
	–110.0 °F - 300.0 °F	5 kΩ thermistor probe	Probe accuracy + 0.4 °F	0.0036 °F
CAPACITANCE	1.000 nF	0.75 µA	2.0+0.8	0.02+0.001
	10.00 nF	0.75 µA	1.0+0.5	0.02+0.001
	100.0 nF	8.3 µA	1.0+0.5	0.02+0.001
	1.000 µF - 100.0 µF	83 µA	1.0+0.5	0.02+0.001
	1000 µF	0.83 mA	1.0+0.5	0.02+0.001
	10 000 µF	0.83 mA	2.0+0.5	0.02+0.001

1. Specifications are for 30 minutes warm-up, 5 1/2 digit resolution and calibration temperature 18 °C - 28 °C.
2. 20% over range on all ranges except 1000 Vdc.
3. Specifications are 2-wire ohms using Math Null. If without Math Null, add 0.2 Ω additional error.
4. Specifications are for the voltage measured at the input terminals only.
5. 20% over range on all range except 750 Vac
6. Specifications are for sinewave inputs >5% of range. Maximum crest factor : 3 at full scale.
7. Additional error to be added as frequency >30 kHz and signal input <10% of range. 30 kHz ~ 100 kHz: 0.003% of full scale per kHz.
8. For 12 A terminal, 10 A dc or ac rms continuous, >10 A dc or ac rms for 30 seconds ON and 30 seconds OFF.
9. For 1 A and 10 A ranges, the frequency is verified for less than 5 kHz.
10. Specifications are for half-hour warm-up, using 0.1 second aperture. The frequency can be measured up 1 MHz as 0.5 V signal to 100 mV/1 V ranges.
11. For 20 Hz ~ 10 kHz, the sensitivity is AC input current from 10% to 120% of range except where noted.
12. For 100 kHz ~ 300 kHz, the sensitivity will be 12% ~ 120% of range except 750 V range.
13. Input Impedence is in paralleled with capacitance <120 pF.
14. For input <200 V rms
15. For input <300 V rms
16. For frequency, use AC Accuracy ± (% of reading + 3 counts)
17. Minimum measured frequency is 1 Hz

Operating Characteristics

Function	Digits	Reading Speed[1]	Function Change (sec)[2]	Range Change (sec)[3]	Auto Range (sec)[4]	Reading Speed Over USB/(sec)[5]
DCV	5.5	15 /s	0.3	0.3	< 1.2	8
	4.5	70 /s	0.2	0.2	< 1.1	19
DCI	5.5	15 /s	0.4	0.4	<1.0	8
	4.5	70 /s	0.3	0.3	< 0.5	19
ACV	5.5	2.5 /s	1.3	1.7	< 5.7	2
	4.5	2.5 /s	1.2	1.5	< 5.1	2
ACI	5.5	2.5 /s	1.8	2.2	< 4.7	2
	4.5	2.5 /s	1.5	1.9	< 4.0	2
FREQ[6]	5.5	9 /s	2.8	2.8	< 5.8	1
	4.5	9 /s	2.5	2.5	< 5.0	1

1. Reading rate of the A/D converter.
2. Time to change from 2-wire resistance to this specified function and to take at least one reading using SCPI "FUNC" and "READ?" commands.
3. Time to change from one range to the next higher range and to take at least one reading using SCPI "FUNC" and "READ?" commands.
4. Time to automatically change one range and to take at least one reading using SCPI "CONF AUTO" and "READ?" commands.
5. Number of measurements per second that can be read through USB using SCPI "READ?" command.
6. Reading rate depends on signal frequency > 10 Hz.

Dimensions

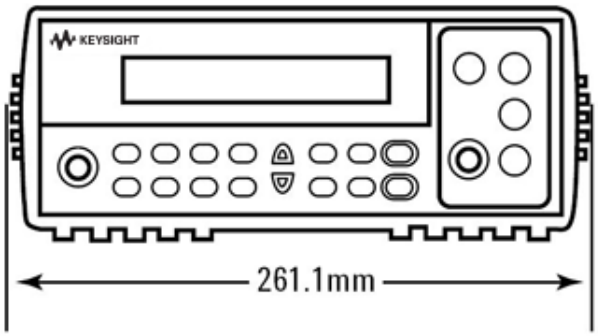

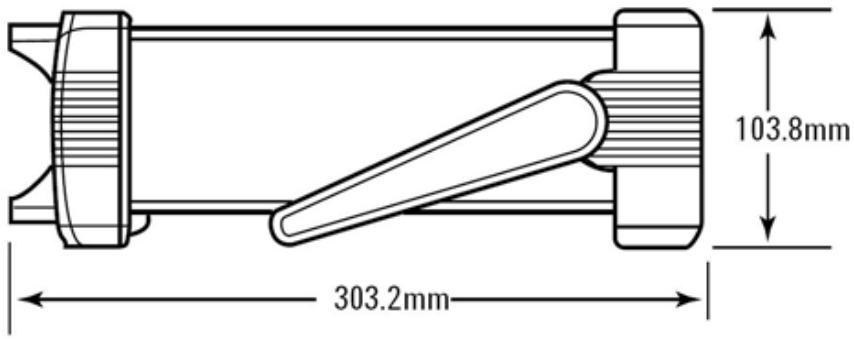

Supplemental Measurement Characteristics

DC VOLTAGE
Measuring Method:
Sigma Delta A-to-D converter
Input Resistance:
10 MΩ ± 2% range (typical)
Input Protection:
1000 V on all ranges

RESISTANCE
Measuring Method:
2-wire Ohms
Open-circuit voltage:
Limited to < 2.8 V
Input Protection:
1000 V on all ranges

DC CURRENT
Shunt Resistance:
0.1 Ω to 10 Ω for 10 mA to 1.2 A ranges
0.01 Ω for 12 A range
Input Protection:
Front Panel 1.25 A, 500 V fuse for I terminal
Internal 15 A, 600 V fuse for 12 A terminal

CONTINUITY/DIODE TEST
Measuring Method:
Uses 0.83 mA ± 0.2% constant current source, < 5 V open circuit voltage
Response Time:
70 samples/second with audible tone
Continuity Threshold:
10 Ω fixed
Input Protection:
1000 V

TEMPERATURE
Measurement Method:
2-wire Ohms measurement of 5 kΩ thermistor sensor (E2308A) with computer conversion
Auto-ranging measurement, no manual range selection
Input Protection:
1000 V

MEASUREMENT NOISE REJECTION
CMRR (Common Mode Rejection) for 1 kΩ unbalance
LO lead

DC	120 dB
AC	70 dB

NMR (Normal Mode Rejection) For 60 Hz (50 Hz) ± 0.1%

5 1/2 digit	65 dB (55 dB)
4 1/2 digit	0 dB

AC VOLTAGE
Measurement Method:
AC coupled true-RMS - measure the ac component with up to 400 Vdc bias any range
Crest Factor:
Maximum 5:1 at full scale
Input Impedance:
1 MΩ ± 2% in parallel with < 100 pF of all ranges
Input Protection:
750 Vrms on all ranges

AC CURRENT
Measuring Method:
DC coupled to the fuse and current shunt, AC coupled true-RMS measurement (measure the AC component only)
Shunt Resistance:
0.1 Ω to 10 Ω for 10 mA to 1.2 A range
0.1 Ω for 12 A range
Input Protection:
Externally accessible 1.25 A, 500 V fuse for I terminal
Internally replaceable 15 A, 600 V fuse for 12 A terminal

FREQUENCY
Measurement Method:
Reciprocal counting technique. AC coupled input using AC voltage function.
Signal Level:
10% of range to full scale input on all ranges
Auto or manual range selection
Gate Time:
0.1 second or 1 period of the input signal, whichever is longer.
Input Protection:
750 Vrms on all ranges

MATH FUNCTIONS
Null, dBm, dB, Min/Max/Avg, Hold, Limit Test

TRIGGER and MEMORY
Single trigger, 1 reading memory

REMOTE INTERFACE
USB 2.0 full speed, USBTMC-USB488 device class

PROGRAMMING LANGUAGE
SCPI, IEEE-488.1, IEEE-488.2

General Characteristics

POWER SUPPLY
100 V/120 V(127 V)/220 V(230 V)/240 V ± 10%
AC line frequency 45 Hz - 66 Hz and (36 Hz - 440 Hz, 100/120 V operation)

POWER CONSUMPTION
16 VA maximum, <11W average

OPERATING ENVIRONMENT
Full accuracy at 0 °C to 55 °C
Full accuracy to 80% RH at 30 °C (non-condensing)
Altitute up to 3000 meters

STORAGE COMPLIANCE
–40 °C to 70 °C

SAFETY COMPLIANCE
Certified to CSA for IEC/EN/CSA/UL 61010-1 2nd Edition

MEASUREMENT CATEGORY
CAT II, 300 V: CAT I 1000 Vdc, 750 Vac rms, 2500 Vpk transient over voltage
Pollution degree 2

EMC COMPLIANCE
Certified to IEC/EN 61326:2002, CISPR 11, and equivalents for Group 1, Class A

SHOCK and VIBRATION
Tested to IEC/EN 60086-2

SHOCK and VIBRATION
Tested to IEC/EN 60086-2

DIMENSION (HxWxD)
Rack: 88.5 mm x 212.6 mm x 272.3 mm
Bench: 103.8 mm x 261.2 mm x 303.2 mm

WEIGHT
3.75 kg, 8.27 lb

WARM UP TIME
30 minutes

Standard Shipped Accessories

Test lead kit
Test report
Power cord
USB interface cable
Quick Start Guide
User's and Service Guide
Product Reference CD-ROM
Keysight IO Library Suite CD-ROM

Options

Opt. 1CM - Rack mount adapter kit

Keysight Optional Accessories



34133A Precision Electronics Test Leads



34330A 30A Current Shunt



E2308A Thermistor Probe

Keysight 34405A Multimeter: Versatile and low cost solution for benchtop testing

5.5 digit dual display increases productivity and throughput in troubleshooting.

Use the Up-Down keys to select the desired measurement range. Just press Shift -> Auto key to switch measurement range automatically.

Superior value with a broad range of functions, which includes the temperature and capacitance measurements.





Connect the supplied test leads to the Input Terminals to start your measurements.

Selecting the secondary display measurements.

Math functions and utility menu that allow users to take reference measurements (ie. Min/Max value and etc.) and store the measurement setups from the front panel.

Evolving Since 1939

Our unique combination of hardware, software, services, and people can help you reach your next breakthrough. We are unlocking the future of technology.
From Hewlett-Packard to Agilent to Keysight.



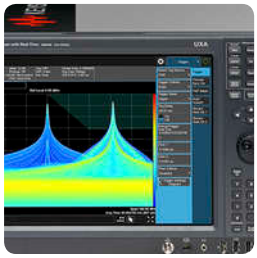



myKeysight

myKeysight
www.keysight.com/find/mykeysight
A personalized view into the information most relevant to you.

http://www.keysight.com/find/emt_product_registration
Register your products to get up-to-date product information and find warranty information.

KEYSIGHT SERVICES
Accelerate Technology Adoption.
Lower costs.

Keysight Services
www.keysight.com/find/service
Keysight Services can help from acquisition to renewal across your instrument's lifecycle. Our comprehensive service offerings—one-stop calibration, repair, asset management, technology refresh, consulting, training and more—helps you improve product quality and lower costs.

CALIBRATION UP TO 10 YEARS WARRANTY
ASSURANCE PLANS

Keysight Assurance Plans
www.keysight.com/find/AssurancePlans
Up to ten years of protection and no budgetary surprises to ensure your instruments are operating to specification, so you can rely on accurate measurements.

Keysight Channel Partners
www.keysight.com/find/channelpartners
Get the best of both worlds: Keysight's measurement expertise and product breadth, combined with channel partner convenience.

www.keysight.com/find/34405A

For more information on Keysight Technologies' products, applications or services, please contact your local Keysight office. The complete list is available at:
www.keysight.com/find/contactus

Americas

Canada	(877) 894 4414
Brazil	55 11 3351 7010
Mexico	001 800 254 2440
United States	(800) 829 4444

Asia Pacific

Australia	1 800 629 485
China	800 810 0189
Hong Kong	800 938 693
India	1 800 11 2626
Japan	0120 (421) 345
Korea	080 769 0800
Malaysia	1 800 888 848
Singapore	1 800 375 8100
Taiwan	0800 047 866
Other AP Countries	(65) 6375 8100

Europe & Middle East

Austria	0800 001122
Belgium	0800 58580
Finland	0800 523252
France	0805 980333
Germany	0800 6270999
Ireland	1800 832700
Israel	1 809 343051
Italy	800 599100
Luxembourg	+32 800 58580
Netherlands	0800 0233200
Russia	8800 5009286
Spain	800 000154
Sweden	0200 882255
Switzerland	0800 805353 Opt. 1 (DE) Opt. 2 (FR) Opt. 3 (IT)
United Kingdom	0800 0260637

For other unlisted countries:
www.keysight.com/find/contactus
(BP-9-7-17)

DEKRA Certified
ISO9001 Quality Management System

www.keysight.com/go/quality
Keysight Technologies, Inc.
DEKRA Certified ISO 9001:2015
Quality Management System

KEYSIGHT TECHNOLOGIES

This information is subject to change without notice.
© Keysight Technologies, 2017
Published in USA, December 2, 2017
5989-4906EN
www.keysight.com