24813-710 FRAME TYPE PLUG-IN UNIT PRO KIT, SHIELDED, PERFORATED, 1 CONNECTOR, 6 U, 10 HP, 167 MM



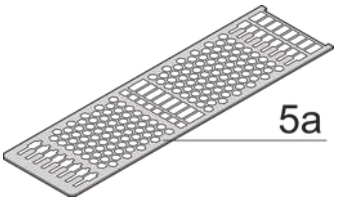

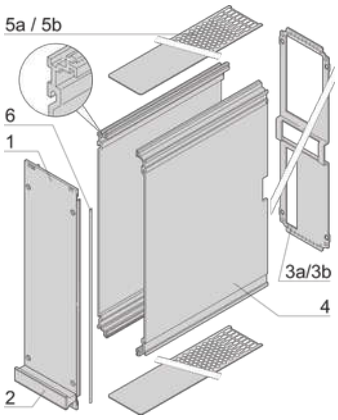

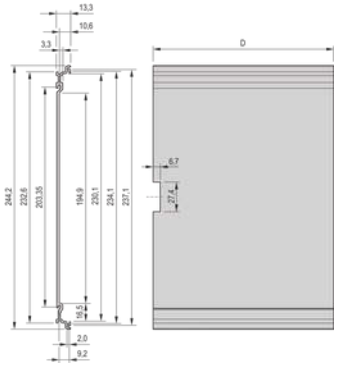

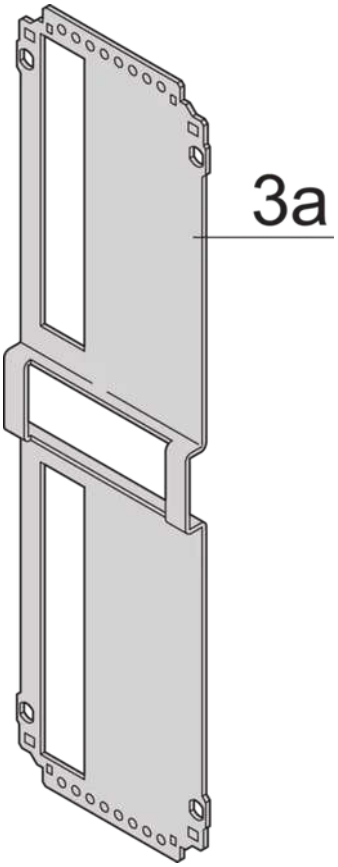

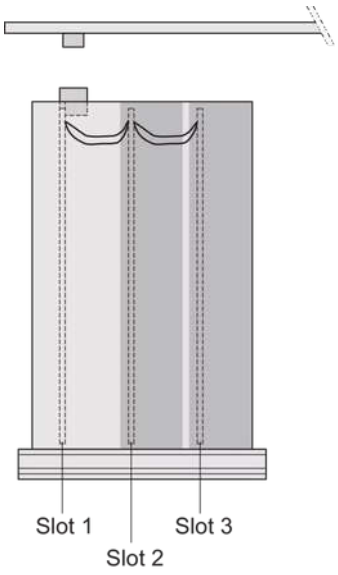

KEY FEATURES

Cover plate with perforation, for guide rails (airflow approx. 60-%)

Rear panel with cut-out for single connector (conforms to EN 60603, DIN 41612, construction types: B, C, D, F, H, Q, R, S)

Extruded side panels with groove to right and left, to insert a PCB (board position in accordance with standard in left side panel only)

PRODUCT ATTRIBUTES

Product Type: Cassette

Type: Frame Type Plug-in Units PRO

Handle Type: Trapezoid

Rack Height: 6 U

Rack Width: 10 HP

Depth: 167 mm

EMC Shielding: Yes

EMC Gasket Type: Textile

Rear Panel Type: Single Connector Cut-Out

Cover Plate Type: Cover Plate with Perforation for Guide Rails

Material: Aluminum

Front Finish: Anodized

Rear Finish: Conductive

Cooling: Perforated

ADDITIONAL PRODUCT DETAILS

Protects a PCB against mechanical damage and discharges electrostatic buildup; for Euroboard formats; pair panel with one cutout for one connector.

To fit further boards without rear connector, guide rail (part no. 24812-301) and 'Board fixing from slot 2' (part no. 24812-301 + screw part no. 24560-178) are required, 2 guide rails, 2 rear panel holders and board fixing for slot 1 and one slot-2 are already included.

Please-order guide rails-separately.

CERTIFICATIONS

RoHS COMPLIANT

North America
All locations
+1.763.422.2661
Chat with us:
schroff.nvent.com

Europe
Straubenhardt, Germany
+49.7082.794.0
Betschdorf, France
+33.3.88.90.64.90
Warsaw, Poland
+48.22.209.98.35
Assago, Italy
+39.02.932.7141
Chat with us:
schroff.nvent.com

Asia
Shanghai, China
+86.21.2412.6943
Qingdao, China
+86.532.8771.6101
Singapore
+65.6768.5800
Shin-Yokohama, Japan
+81.45.476.0271
Chat with us:
schroff.nvent.com

Middle East & India
Dubai, United Arab Emirates
+971.4.378.1700
Bangalore, India
+91.80.6715.2001
Istanbul, Turkey
+90.216.250.7374
Chat with us:
schroff.nvent.com

nVent

Our powerful portfolio of brands:
nVent.com **CADDY ERICO HOFFMAN RAYCHEM SCHROFF TRACER**

© 2023 nVent. All nVent marks and logos are owned or licensed by nVent Services GmbH or its affiliates. All other trademarks are the property of their respective owners.

nVent reserves the right to change specifications without notice.