IF6027

Inductive sensor

IFB3002-BPKG/V2A/10-55V/6M/BH

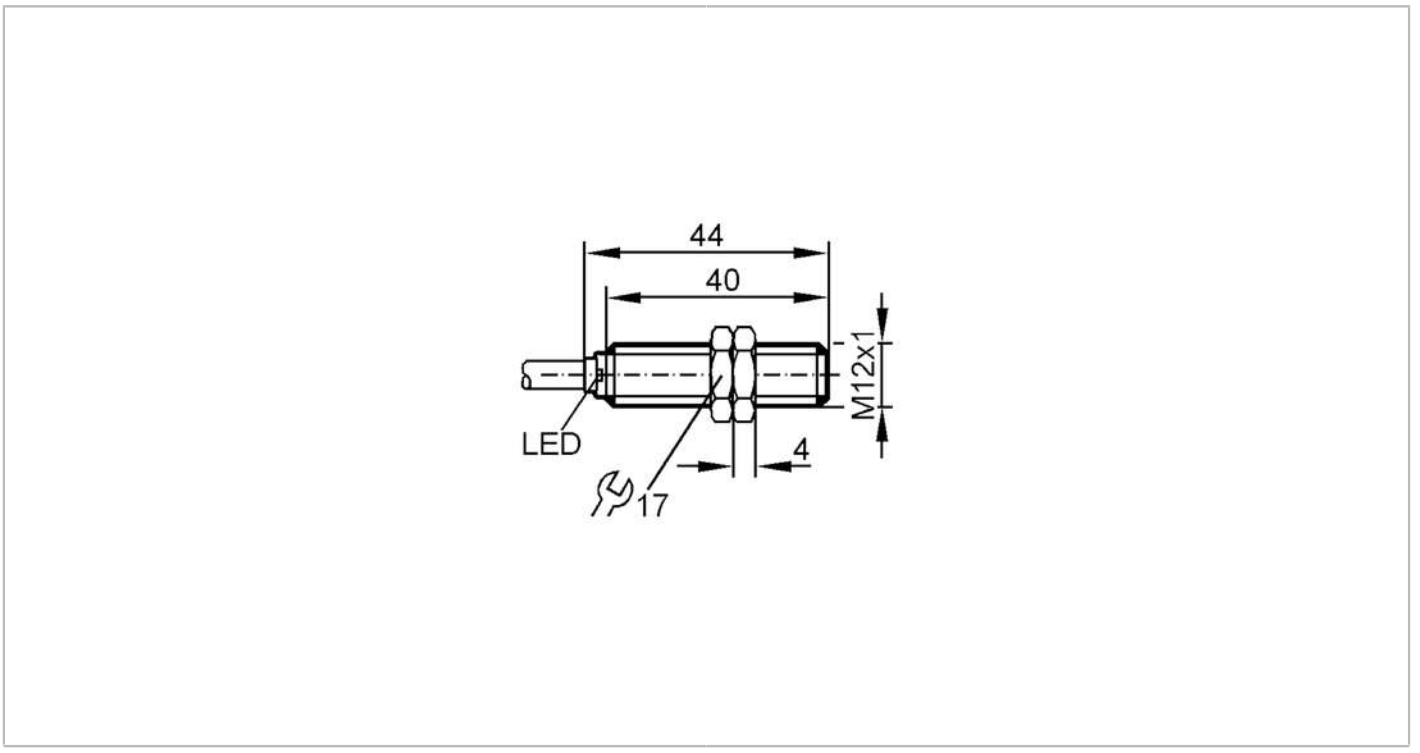

Product characteristics		
Electrical design		PNP
Output function		normally open
Sensing range	[mm]	2
Housing		threaded type
Dimensions	[mm]	M12 x 1
Application		
Special feature		Halogen-free
Electrical data		
Operating voltage	[V]	10...55 DC
Current consumption	[mA]	< 15
Protection class		III
Reverse polarity protection		yes
Outputs		
Electrical design		PNP
Output function		normally open
Max. voltage drop switching output DC	[V]	2.5
Permanent current rating of switching output DC	[mA]	125; (150 (...50 °C))
Short-time current rating of switching output	[mA]	150
Switching frequency DC	[Hz]	1000
Short-circuit protection		yes

IF6027

Inductive sensor

IFB3002-BPKG/V2A/10-55V/6M/BH

Type of short-circuit protection		pulsed	
Overload protection		yes	
Detection zone			
Sensing range	[mm]	2	
Real sensing range Sr	[mm]	2 ± 10 %	
Operating distance	[mm]	0...1.6	
Accuracy / deviations			
Correction factor		steel: 1 / stainless steel: 0.7 / brass: 0.5 / aluminium: 0.4 / copper: 0.3	
Hysteresis	[% of Sr]	3...15	
Switch point drift	[% of Sr]	-10...10	
Operating conditions			
Ambient temperature	[°C]	-25...80	
Protection		IP 67	
Tests / approvals			
EMC		EN 60947-5-2	
MTTF	[years]	2383	
Mechanical data			
Weight	[g]	231	
Housing		threaded type	
Mounting		flush mountable	
Dimensions	[mm]	M12 x 1	
Thread designation		M12 x 1	
Materials		housing: stainless steel (1.4305 / 303); sensing face: PBT; end cap: TPE	
Displays / operating elements			
Display		switching status	1 x LED, yellow
Accessories			
Items supplied		lock nuts: 2	
Remarks			
Pack quantity		1 pcs.	

IF6027

Inductive sensor

IFB3002-BPKG/V2A/10-55V/6M/BH

Electrical connection

Cable: 6 m, PUR, Halogen-free; 3 x 0.34 mm²

Connection

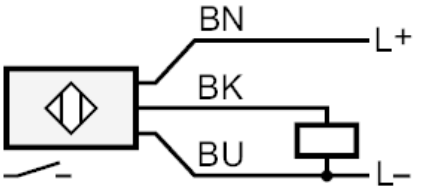

	Core colours
BN	brown
BK	black
BU	blue