Brand of NTN Group

Technical data

SESP210N

Bearing units



Stainless steel cast housing,stainless steel insert ball bearing with eccentric locking collar, single lip seal, food grease

KIT CONTENT

SES210, SP210N

VISUAL (S)

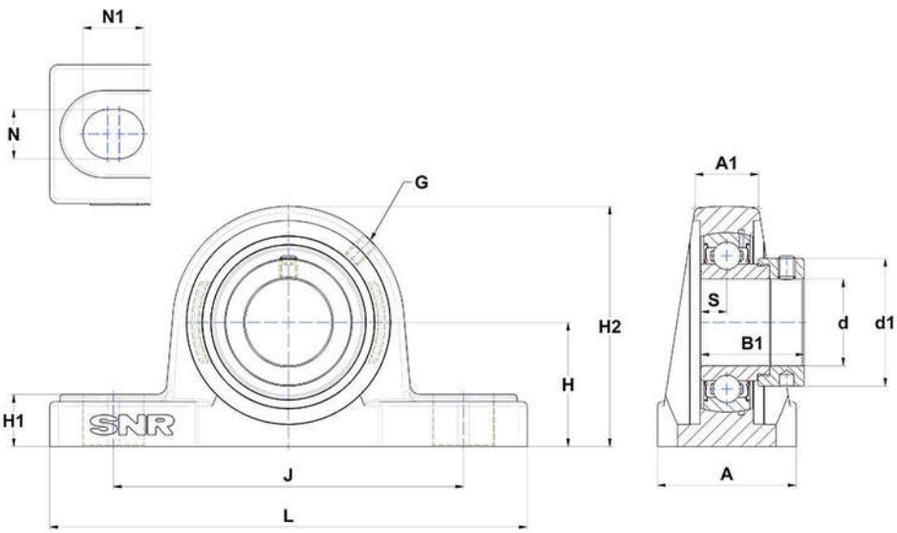

PRODUCT DEFINITION

Brand	SNR
A - Housing width	60 mm
A1 - Housing top width	30 mm
B - Width of Inner Ring	30,2 mm
d - Shaft diameter	50 mm

PRODUCT DEFINITION	
d1 - Outer dia of eccent. Lock. collar / nut of adapter sleeve	69,9 mm
G - Grease fitting	M6x1
H - Distance mounting base to centerline spheric. seating diam.	57,2 mm
H1 - Housing foot height	22 mm
H2 - Housing height	114 mm
J - Mounting holes distance	159 mm
L - Housing length	206 mm
N - Mounting hole dimension	20 mm
N1 - Mounting hole length	25 mm
S - Distance front side/bearing centre	10 mm

PRODUCT PERFORMANCE	
C - Dynamic load rating	35000000 mN
C0 - Static load rating	23100000 mN
Operating temperature min.	253,15 °K
Operating temperature max.	373,15 °K

OTHER FEATURES	
Mass	3,25 kg
Recommended tightening torque for set screw	8.3 N-m