THE INFORMATION CONTAINED IN THIS DRAWING IS THE SOLE PROPERTY OF L-COM, INC. ANY REPRODUCTION IN PART OR WHOLE WITHOUT THE WRITTEN PERMISSION OF L-COM, INC. IS PROHIBITED.

RoHS Compliant ✔

REVISIONS			
REV	DESCRIPTION	DATE	APPROVED
A	INITIAL RELEASE	10/16/12	D.GRIFFIN

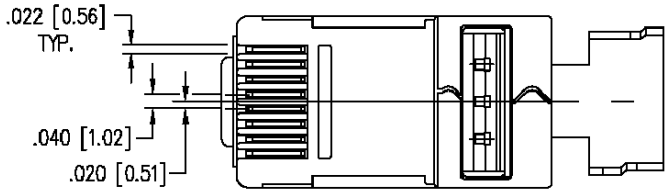

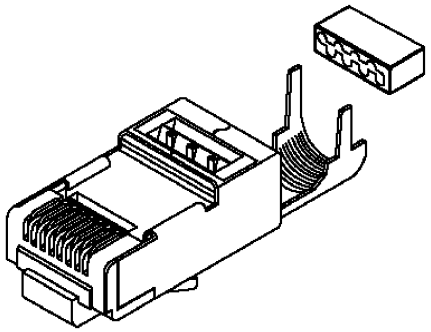

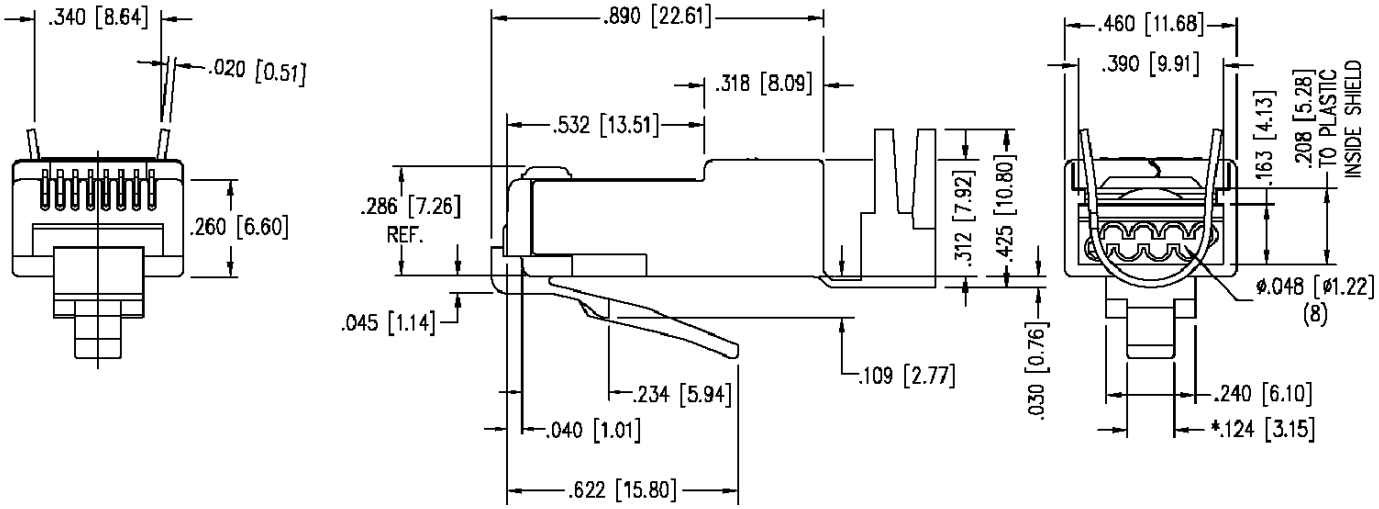

SPECIFICATIONS : "PATENTED"

PERFORMANCE:	MEETS OR EXCEEDS CATEGORY 6 ANSI/EIA 568-C.2 PERFORMANCE TUNED TO CABLES MEETING CATEGORY 6 SPECIFICATIONS.
CONTACT MATERIAL:	PHOSPHOR BRONZE – .012
CONTACT PLATING:	50 MICRO-INCH : OTHER PLATING OPTIONS AVAILABLE SELECTIVE 24 CARAT HARD GOLD PLATE IN CONTACT AREA OVER 100 MICRO-INCH MINIMUM NICKEL PLATE PER CURRENT SELECTIVE GOLD PLATING REQUIREMENTS.
SHIELD MATERIAL:	CDA-260 1/4 HARD BRASS .012 EXCEPT WHERE NOTED .020
SHIELD PLATING:	100% TIN 100-150 MICRO INCH TIN PLATED
PLUG MATERIAL:	POLYCARBONATE
PLUG TOLERANCES AND DIMENSIONS:	* COMPLIES WITH ANSI/TIA-1096-A REQUIREMENTS
FLAME AUTO EXTINGUISH	94-V0 – File# E188111
OPERATION TEMPERATURE:	-40°C TO +85°C
INSERTION/EXTRACTION LIFE:	1000 CYCLES
CONTACT RESISTANCE:	10 MILLOHMS MAX.
CURRENT/VOLTAGE:	30 VAC/42 VDC AT 1.5 AMPS

* EIGHT CONDUCTOR MODULAR PLUG
* FOR HIGH SPEED APPLICATION
* FOR CONDUCTORS WITH AN O.D. RANGE OF .044 –.048
* USE FOR SOLID OR STRANDED CONDUCTORS
* PRODUCT REQUIRES A CONDUCTIVE LOAD BAR (PT. No. LB006)
* SHIELDED VERSION (SPECIAL HEIGHT) MODULAR PLUG
* FOR CABLE DIAMETERS UP TO .310

* COMPONENT SOLD IN PACKS OF 10.

UNLESS OTHERWISE SPECIFIED,
DIMENSIONS ARE IN INCHES [mm]
OVERALL CABLE LENGTH TOLERANCE:
≤12 [305] = +1 [25] / -0
>12 [305] ≤60 [1524] = +2 [51] / -0
>60 [1524] ≤120 [3048] = +4 [102] / -0
>120 [3048] ≤300 [7620] = +6 [152] / -0
>300 [7620] = +5% / -0%
ALL OTHER DIMENSIONAL TOLERANCES:
.X = ± .2
.XX = ± .02
.XXX = ±.005
PROJECTION

APPROVALS	DATE
DRAWN BY D.FRISIELLO	10/16/12
CHECKED BY D.GUTTADAURO	10/16/12
APPROVED BY D.GUTTADAURO	10/16/12

CONFIGURATION DETAILS OF UNDIMENSIONED FEATURES MAY VARY

COLOR VARIATIONS MAY OCCUR

L-COM Global Connectivity
45 BEECHWOOD DRIVE
NORTH ANDOVER, MA
01845

CATEGORY
TELECOM/MODULAR

PRODUCT DESCRIPTION
RJ45P SHLD STRNRLF LBAR LODC

SIZE	FSCM NO.	DWG. NO.	REV.
A	43321	TSP8048C5S-10PK	A

SCALE: NONE | CAD FILE: TSP8048C5S-10PK.SLDDRW | SHEET 1 OF 1