E61438

Spring arm for encoders

ENCODER SPRING ARM

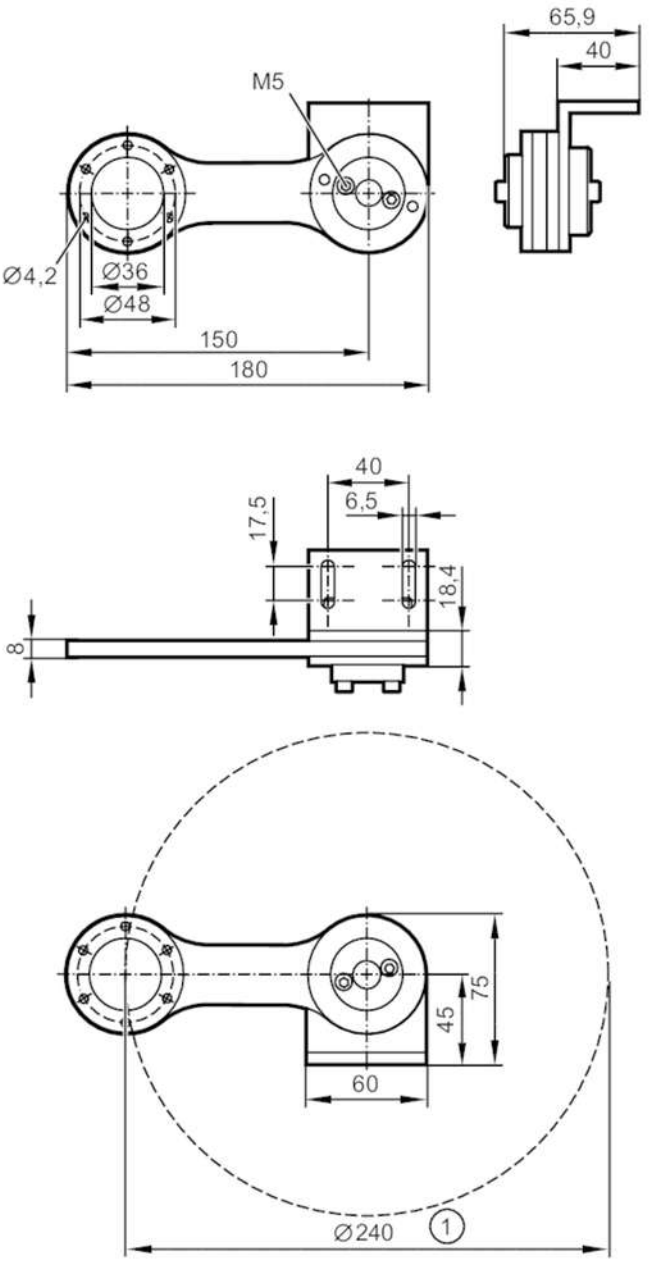

1 operating range

Application		
Design		for encoder with clamp flange
Operating conditions		
Ambient temperature	[°C]	-30...60
Mechanical data		
Weight	[g]	527.1
Installation instruction		can be mounted from both sides
Dimensions	[mm]	180 x 65.9 x 75
External diameter	[mm]	300
Materials		aluminium anodised; Spring: stainless steel (1.4310 / 301)
Tightening torque	[Nm]	4.3

E61438

Spring arm for encoders

ENCODER SPRING ARM

Max. angular displacement	[°]	45
Activation force	[N]	10...30

Remarks

Remarks	With scale
Pack quantity	1 pcs.

Diagrams and graphs

Installation instruction

