RAFIX 22 FS+, illuminated pushbutton, flat bezel, round collar, momentary contact function, frontring slate gray, bezel blue



fields of application

- Measurement-control-regulation
- Electrical engineering
- Mechanical and system engineering
- Vehicle construction
- Handheld terminals
- Industrial robots

special features

- Illuminated pushbutton, panel illumination with SMT LED
- Low installation depth 9.2 mm (PCB) or 27 mm (QC)
- Special tactile feedback
- Ideal for operation with gloves
- Connection types: printed circuit board connection (PCB) or plug-in connection (QC)
- PCB switching elements minimize assembly errors
- Switching elements with silver contacts (max. 250 V/4 A) or gold contacts (max. 35 V/100 mA)
- The tactile switch adapter allows MICON 5 tactile switches to be used as switching elements
- Design adaptation by different front ring variations
- Degree of protection: IP 65 at the front
- Two collar shapes: round and square

description

RAFIX control devices are defined at RAFI as modular elements, consisting of an actuating element, if necessary a coupling and an individual contact or lighting unit.

Actuating elements (such as pushbuttons, emergency stop actuators, etc.) have the intended tactility, reset and function only when assembled with the appropriate switching elements.

Pushbutton with translucent bezel. In combination with a corresponding switching element, the bezel can be fully illuminated.

technical data

general

Disassembly possible	no
Bezel color	blue
Property of bezel / mushroom	translucent
Front ring color	slate gray

direct links

- RAFI eCatalog

The information in this data sheet only contains general descriptions and / or performance features, which may not apply precisely as described to the respective application, and which my change due to further product enhancements. The technical data, illustrations and other information about our products are the mere results of individual technical testing. These descriptions and other product features are only binding if they expressly agreed upon at the time of the conclusion of a binding contract. In all other cases, we reserve the right to make technical changes as well as changes of availability. Pictures and other graphic illustrations are approximations only. All product names may be trademarks or brand names of the RAFI Group or any other sub-supplier of RAFI. The use of such by any third parties for their own purposes may infringe the rights of the respective entity holding those rights.

RAFI GmbH & Co. KG

Ravensburger Str. 128-134
88276 Berg / Ravensburg
Germany
www.rafi-group.com,
info.headquarters@rafi-group.com

Collar shape	round
Operating temperature, min.	-25 °C
Operating temperature, max.	70 °C
Storage temperature, min.	-40 °C
Storage temperature, max.	80 °C
illuminated	Yes
Packaging	Box
Packaging unit	10 pcs.
net weight	6.4 g
Operating life	1,000,000 cycles
B10	1,300,000 cycles
Degree of protection, front side, according to DIN EN 60529	IP65
UL Enclosure Type Rating front side	type 1 type 4X indoor
Environment resistance	IEC 60068-2-14 IEC 60068-2-30 IEC 60068-2-33 IEC 60068-2-78
Salt-spray resistance according to standard	IEC 60068-2-11
MOQ order	10 pcs.
RoHS compliant	Yes
REACH compliant	Yes

mounting diameters

Outside dimension, length	29.8 mm
Outside dimension, width	29.8 mm
Outside dimension, height	18.5 mm
Mounting hole	22.3 mm
Mounting depth	9.2 mm
Installation height	9.85 mm
Grid, min.	30 x 30 mm
Collar dimension	ø 29,8 mm

mechanical data

Actuation function	momentary contact function
Operating force, max.	100 N
Operating travel, max.	4 mm
Fixing	Threaded ring
Threaded ring torque, max.	1.2 Nm

The information in this data sheet only contains general descriptions and / or performance features, which may not apply precisely as described to the respective application, and which my change due to further product enhancements. The technical data, illustrations and other information about our products are the mere results of individual technical testing. These descriptions and other product features are only binding if they expressly agreed upon at the time of the conclusion of a binding contract. In all other cases, we reserve the right to make technical changes as well as changes of availability. Pictures and other graphic illustrations are approximations only. All product names may be trademarks or brand names of the RAFI Group or any other sub-supplier of RAFI. The use of such by any third parties for their own purposes may infringe the rights of the respective entity holding those rights.

RAFI GmbH & Co. KG

Ravensburger Str. 128-134
88276 Berg / Ravensburg
Germany
www.rafi-group.com,
info.headquarters@rafi-group.com

drawings

Dimensioned drawing

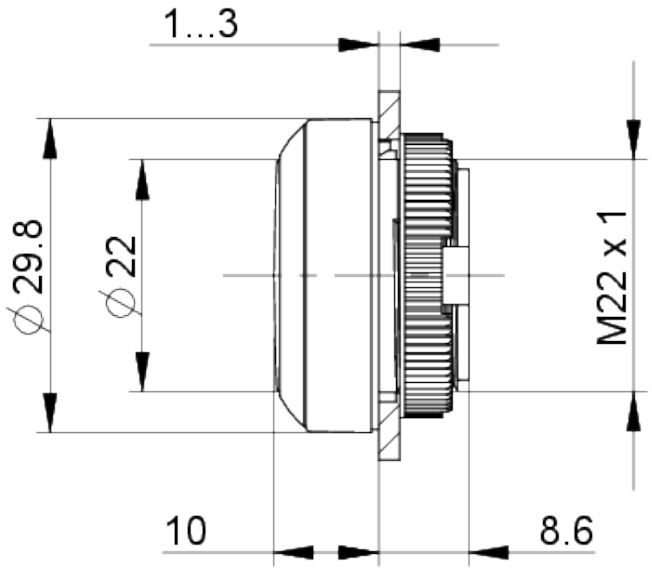

System drawing

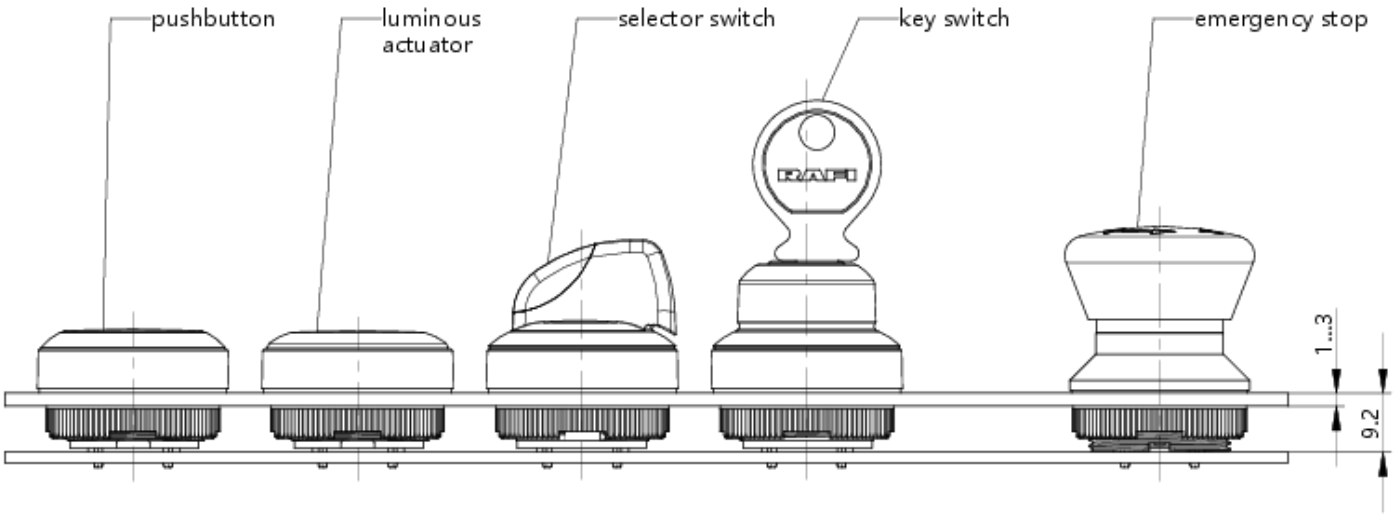

The information in this data sheet only contains general descriptions and / or performance features, which may not apply precisely as described to the respective application, and which my change due to further product enhancements. The technical data, illustrations and other information about our products are the mere results of individual technical testing. These descriptions and other product features are only binding if they expressly agreed upon at the time of the conclusion of a binding contract. In all other cases, we reserve the right to make technical changes as well as changes of availability. Pictures and other graphic illustrations are approximations only. All product names may be trademarks or brand names of the RAFI Group or any other sub-supplier of RAFI. The use of such by any third parties for their own purposes may infringe the rights of the respective entity holding those rights.

RAFI GmbH & Co. KG

Ravensburger Str. 128-134
88276 Berg / Ravensburg
Germany
www.rafi-group.com,
info.headquarters@rafi-group.com

System drawing

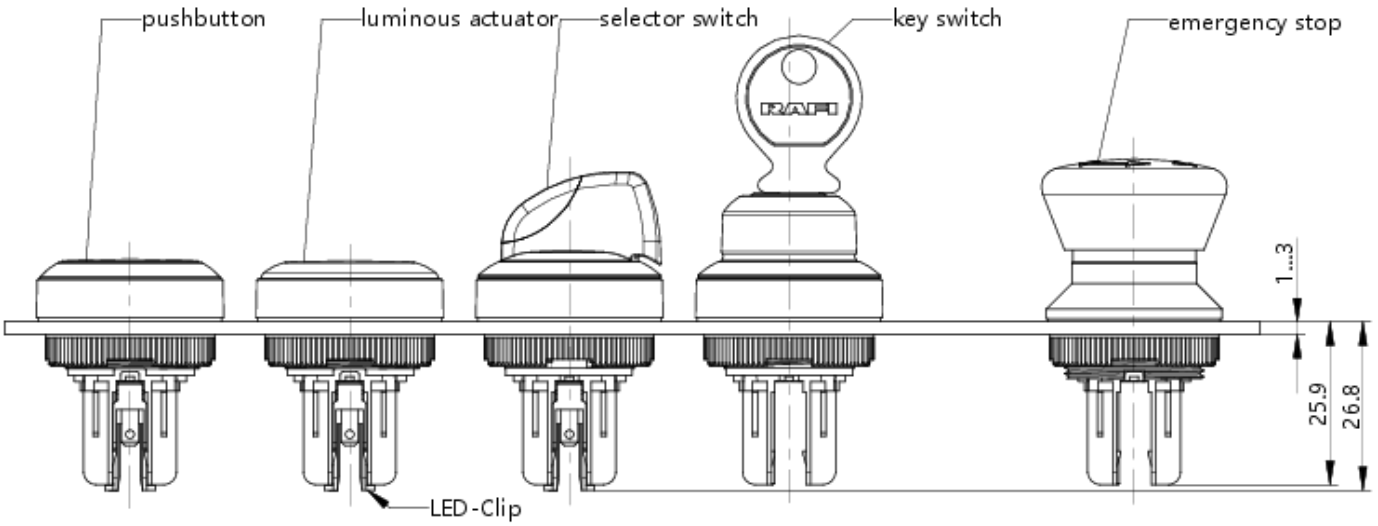

Mounting hole drawing

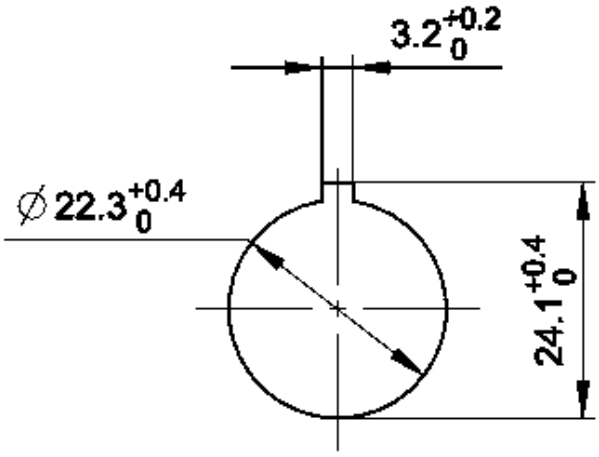

acc. to IEC 60947-5-1

The information in this data sheet only contains general descriptions and / or performance features, which may not apply precisely as described to the respective application, and which my change due to further product enhancements. The technical data, illustrations and other information about our products are the mere results of individual technical testing. These descriptions and other product features are only binding if they expressly agreed upon at the time of the conclusion of a binding contract. In all other cases, we reserve the right to make technical changes as well as changes of availability. Pictures and other graphic illustrations are approximations only. All product names may be trademarks or brand names of the RAFI Group or any other sub-supplier of RAFI. The use of such by any third parties for their own purposes may infringe the rights of the respective entity holding those rights.

RAFI GmbH & Co. KG

Ravensburger Str. 128-134
88276 Berg / Ravensburg
Germany
www.rafi-group.com,
info.headquarters@rafi-group.com

front panel drawing

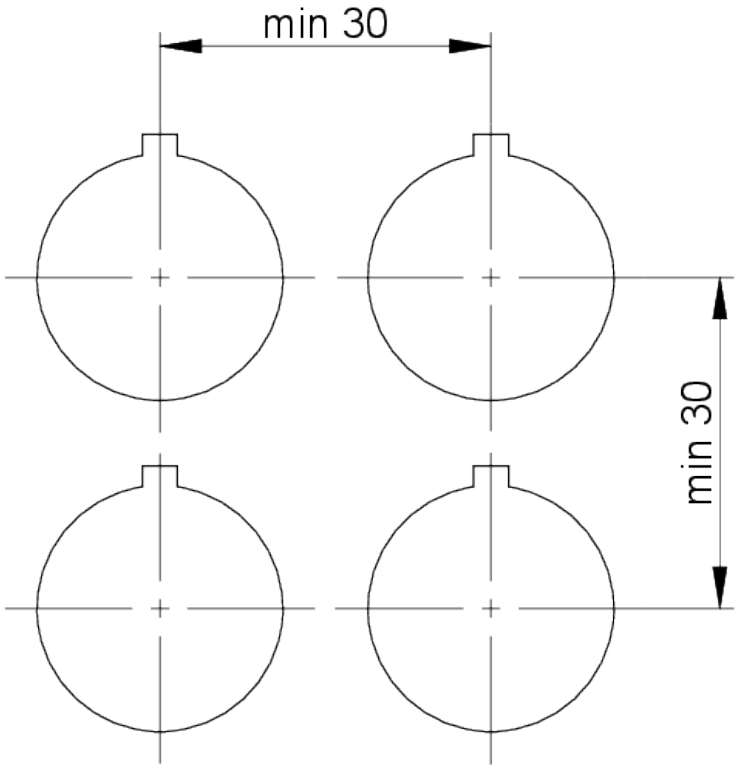

The information in this data sheet only contains general descriptions and / or performance features, which may not apply precisely as described to the respective application, and which my change due to further product enhancements. The technical data, illustrations and other information about our products are the mere results of individual technical testing. These descriptions and other product features are only binding if they expressly agreed upon at the time of the conclusion of a binding contract. In all other cases, we reserve the right to make technical changes as well as changes of availability. Pictures and other graphic illustrations are approximations only. All product names may be trademarks or brand names of the RAFI Group or any other sub-supplier of RAFI. The use of such by any third parties for their own purposes may infringe the rights of the respective entity holding those rights.

RAFI GmbH & Co. KG

Ravensburger Str. 128-134
88276 Berg / Ravensburg
Germany
www.rafi-group.com,
info.headquarters@rafi-group.com