Active power transducer

G2BA480V12A
4...20mA

Loadmonitors - GAMMA series

True power monitoring in 1- or 3-phase mains

Analog output 4...20mA

Suitable for VFI (10 to 100Hz)

Zoom voltage 24V to 240V DC and 48V to 240V AC

Width 22.5mm

Industrial design



Read and understand these instructions before installing, operating or maintaining the equipment.

Danger!
Never carry out work on live parts! Danger of fatal injury! The product must not be used in case of obvious damage. To be installed by an authorized person.

Technical data

1. Functions
True power monitoring in 1- and 3-phase mains with analog output 4 ... 20mA and the following settings which are selected by means of rotary switch:

Zero	setting of zero point (0%, 25%, 50%, 75% of nominal value)
Zero Fine	fine setting of zero point (0% ... 25% of nominal value)
Span	span (100%, 75%, 50%, 25% of nominal value)
Range	measuring range reversible between 0.75kW, 1.5kW, 3kW, 6kW

2. Indicators

Green LED U ON:	indication of supply voltage
Yellow LED's ON/OFF:	indication analog output 4...20mA

3. Mechanical design
Self-extinguishing plastic housing, IP rating IP40
Mounted on DIN-Rail TS 35 according to EN 60715
Mounting position: any
Shockproof terminal connection according to VBG 4 (PZ1 required), IP rating IP20
Tightening torque: max. 1Nm
Terminal capacity:
- 1 x 0.5 to 2.5mm² with/without multicore cable end
- 1 x 4mm² without multicore cable end
- 2 x 0.5 to 1.5mm² with/without multicore cable end
- 2 x 2.5mm² flexible without multicore cable end

4. Input circuit

Supply voltage:	24V to 240V d.c. 48V to 240V a.c.
Terminals:	A1-A2 (galvanically seperated)
Tolerance:	
48V to 240V a.c.	-15% to +10%
24V to 240V d.c.	-20% to +25%
Rated frequency:	
48 to 400Hz	48V to 240V a.c.
Rated consumption:	2.5VA (1.3W)
Duration of operation:	100%
Reset time:	500ms
Ripple and noise:	-
Drop-out voltage:	>30% of supply voltage
Overvoltage category:	III (in accordance with IEC 60664-1)
Rated surge voltage:	4kV

5. Output circuit

1 analog output	4...20mA
Terminals:	X1(+) - X2(-)
Settling time:	<450ms
Burden:	max. 500Ω
Galvanic isolation:	3kV d.c.

6. Measuring circuit

Measuring range P_N:	reversible between 0.75kW, 1.5kW, 3kW, 6kW
Wave form	
a.c. Sinus:	10 to 400Hz
Sinus weighted PWM:	10 to 100Hz
Measuring input voltage:	terminals L1-L2-L3
1-phase mains	0 to 480V a.c.
3-phase mains	3~ 0 to 480/277V
Overload capacity:	
1-phase mains	550V a.c.
3-phase mains	3~ 550/318V
Input resistance:	1.25MΩ
Measuring input current:	terminal i-k
Measuring range 0.75kW, 1.5kW:	0 to 6A
Measuring range 3kW, 6kW:	0 to 12A (for I>8A distance >5mm)
Overload capacity:	12A permanent
Input resistance:	<10mΩ
Overvoltage category:	III (in accordance with IEC 60664-1)
Rated surge voltage:	4kV

7. Accuracy

Base accuracy:	±2% (of maximum scale value)
Frequency influence:	±0.025% / Hz
Voltage influence:	-
Temperature influence:	≤0.05% / °C

8. Ambient conditions

Ambient temperature:	-25 to +55°C (in accordance with IEC 60068-1) -25 to +40°C (in accordance with UL 508)
Storage temperature:	-25 to +70°C
Transport temperature:	-25 to +70°C
Relative humidity:	15% to 85% (in accordance with IEC 60721-3-3 class 3K3)
Pollution degree:	3 (in accordance with IEC 60664-1)
Vibration resistance:	10 to 55Hz 0.35mm (in accordance with IEC 60068-2-6)
Shock resistance:	15g 11ms (in accordance with IEC 60068-2-27)

G2BA480V12A
4...20mA

Functions

Zero = 0% / Span = 25% ; Zero = 0% / Span = 100%

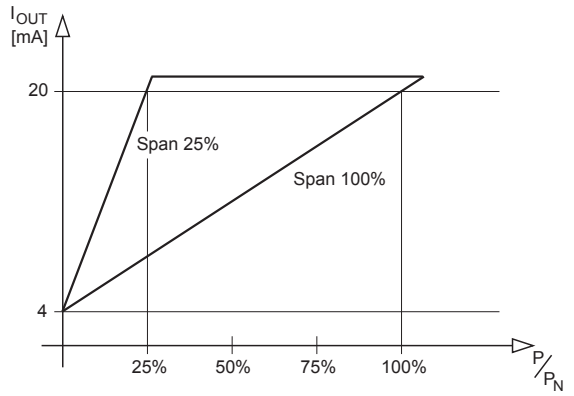

Zero = 25% / Span = 25% ; Zero = 25% / Span = 75%

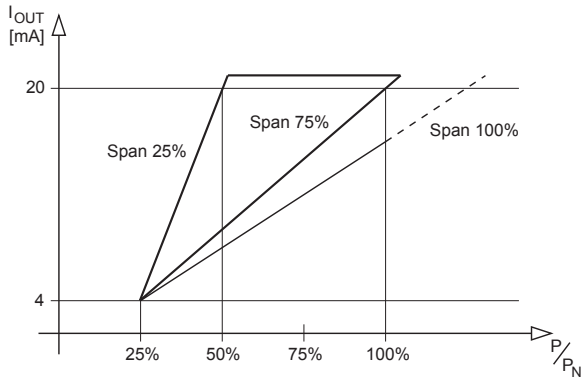

Zero = 37,5% / Span = 50% ; Zero = 37,5% / Span = 100%

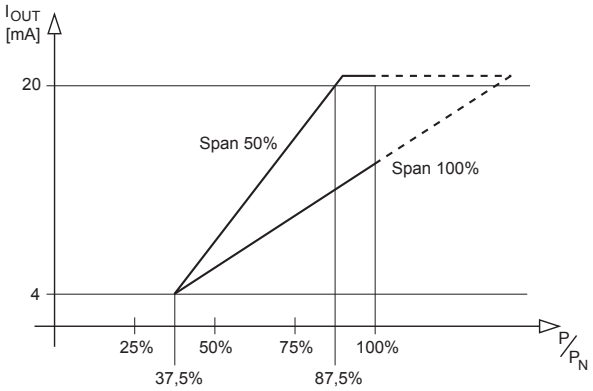

Connections

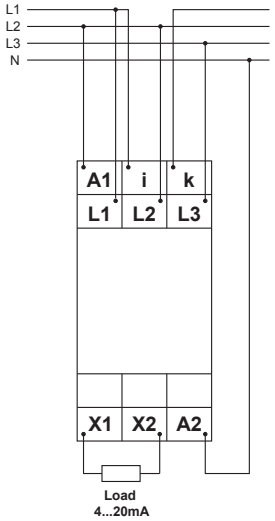

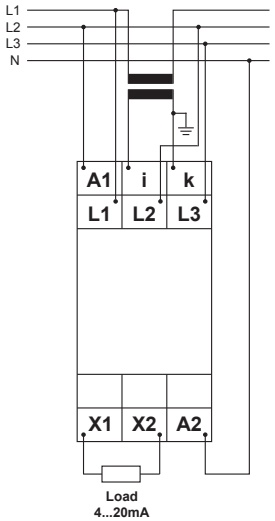

Dimensions

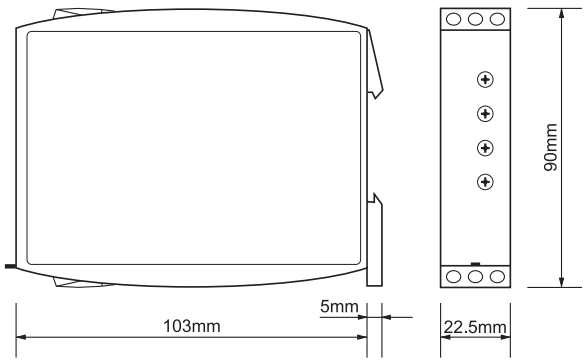

TELE Haase Steuergeräte Ges.m.b.H.
Vorarlberger Allee 38
A-1230 Wien

RELEASE 2012/08

Subject to alterations and errors

Technik Braucht Kontrolle