MOFLASH SIGNALLING

X500



Overview

VISUAL SIGNALS - INDUSTRIAL - XENON BEACONS

The X500 are suitable for security & general industrial signalling applications where a very powerful signal is required. These beacons are of the **flashing** mode type (single stage alarm). Xenon beacons (sometimes called strobes) are controlled via a PCB and put out a very brief but very bright flash of white light by ionizing and then discharging a large current through the xenon gas.

This range of beacons incorporates an internal Fresnel lens designed to maximise the light intensity and has a double flash option (activated by a jumper link on the PCB) that extends the signal duration making it more noticeable to the human eye.

Features

- Continuously rated
- Very high light output
- Flashing
- Suitable for surface or wall mounting
- Optional wall bracket - See accessories on page 2
- 3 point fix
- 360° light output around the vertical axis
- 180° light output around the horizontal axis
- Available in 230vAC

Material

- UV Stable Polycarbonate Lens
- UV Stable ABS Platic Base

*Flashes Par Minute

IP 65

Xenon 24J

60 or 90 FPM*

-25 to +45°C

50/60Hz

APPROVALS & CONFORMITIES

ISSUE 1

uksales@moflash.co.uk
moflashkm@moflash.com
exportsales@moflash.co.uk

UK +44(0)121 446 5322
FR +33(0)1 70 72 12 71

11 Upper Conybere Street
Highgate, Birmingham
B12 0EB, England

www.moflash.com

MOFLASH SIGNALLING

X500

Ordering Information

Voltage	Ordering Information					Mode & Current Consumption	
Nominal Voltage	Amber	Red	Blue	Green	Clear	Flashing @60 FPM	Flashing @90 FPM
230vAC	X500-22-01	X500-22-02	X500-22-03	X500-22-04	X500-22-05	230mA @230vAC	260mA @230vAC

Effective Candela (Cd) - Formula Blondel-Rey				
Amber	Red	Blue	Green	Clear
335	95.4	80.6	160.4	583.8

Weights & Dimensional Drawings

Kg	230v
Net Weight	0.848
Gross Weight	0.925

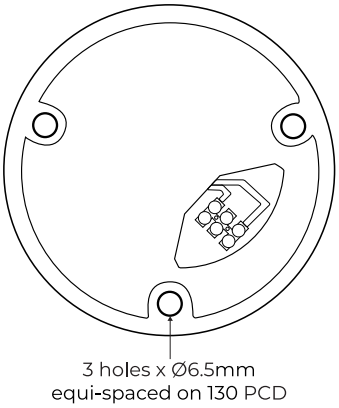

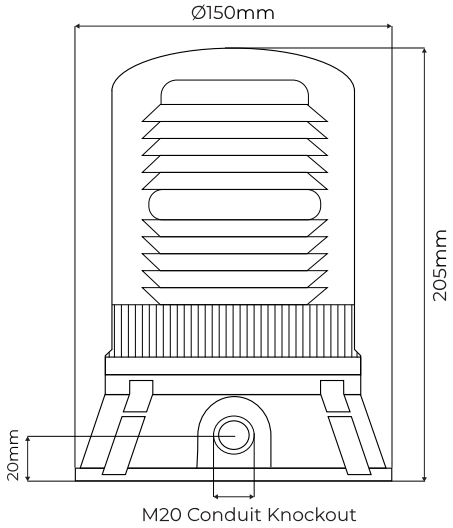

Accessories

Part Code	Description
50010	Cage Guard - Suitable for use with the 200/400/500 Series Beacon range **(Cannot be fitted with Wall Bracket)**
50004	Angled Wall Bracket - Suitable for use with the 200/400/500 Series Beacon range **(Cannot be fitted with Cage guard)**
50064	Amber Lens - Suitable for use with the 200/400/500 Series Beacon range.
50065	Red Lens - Suitable for use with the 200/400/500 Series Beacon range.
50066	Blue Lens - Suitable for use with the 200/400/500 Series Beacon range.
50067	Green Lens - Suitable for use with the 200/400/500 Series Beacon range.
50068	Clear Lens - Suitable for use with the 200/400/500 Series Beacon range.


50010


50004


50064


50065


50066


50067


50068

uksales@moflash.co.uk
moflashkm@moflash.com
exportsales@moflash.co.uk
UK +44(0)121 446 5322
FR +33(0)1 70 72 12 71
11 Upper Conybere Street
Highgate, Birmingham
B12 0EB, England
www.moflash.com

APPROVALS & CONFORMITIES

UK CA CE RoHS