1/4" DEEP 6-POINT SOCKETS - METRIC | E113751



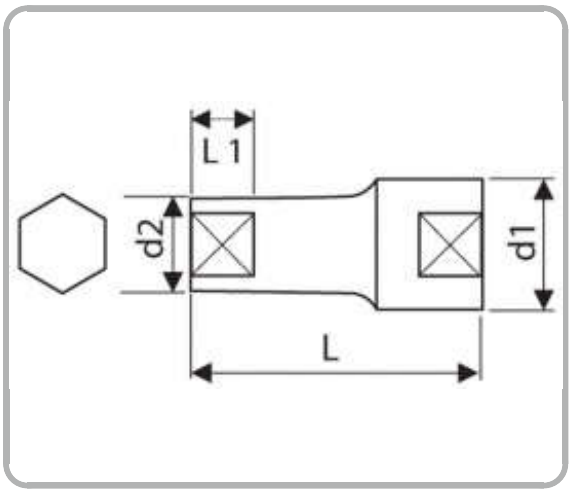

Description

- ISO 2725-1 - DIN 3124 - ISO 1174-1 - ISO 1711-1 - ISO 691
- Chrome vanadium steel.
- OGV Profile: tightening torque applied to the sides rather than to the angles of the nut.
- High chrome finish.
- For manual use.

Information

EAN	3258951137512
A [mm]	4
d1 [mm]	11.8
d2 [mm]	6.9
L [mm]	49,5
L1 [mm]	5
Conditioning	10
[g]	18