BRADHARRISON®
From Aero-Motive (UK) Limited

Part No 8AX006-315

MICRO-CHANGE '8A' SERIES RE-WIREABLE CONNECTOR

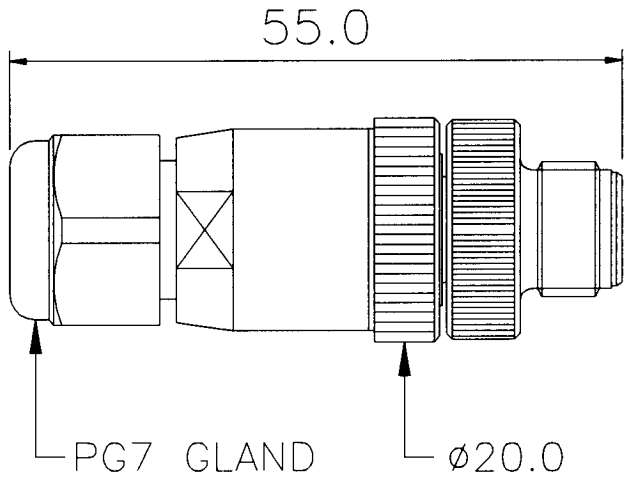

4 WIRE	
Typical Wire Colours	
Pin No.	Wire
1	Brown
2	White
3	Blue
4	Black
5	–

5 WIRE	
Typical Wire Colours	
Pin No.	Wire
1	Brown
2	White
3	Blue
4	Black
5	Grey

PG7 CABLE GLAND WILL ACCOMODATE CABLE DIAMETERS FROM : 2.5mm TO 6.5mm WITH A MAXIMUM WIRE GAUGE OF 0.75mm^2

PART No MATRIX

8	A	X	0	0	6	–	3	1	5
8=Micro Change	A=Field Attachable	4=4 Pole 5=5 Pole	006 = Male Straight				3= Screw Terminal	1=PG7 Cable Gland	5=Plastic Body

AERO-MOTIVE(UK)LTD	THIS DRAWING CONTAINS INFORMATION THAT IS PROPRIETARY TO AERO-MOTIVE (UK) LTD. AND NOT BE USED WITHOUT WRITTEN PERMISSION.	DRAWN	T.Davies	REV.
FACTORY 9 RASSAU IND. EST. EBBW VALE GWENT NP35SD		DATE	23/9/97	A