600SH Series Data Sheet

Distinctive features



Some 600 series toggle switch models are intended for peak currents up to 150A 250VAC. Available in SP, DP and 3 pole configurations, they feature silver cadmium oxide contacts. Single and double pole models are UL approved (3/4HP 125VAC).

Max. current/voltage rating with :
- **capacitive load** : 15/150A 125VAC and 250VAC - 5.000 cycles
10/150A 125VAC and 250VAC - 10.000 cycles
4/90A (10ms) 60VDC - 10.000 cycles
- **motor load (.)** : 15(6)A 250VAC - 10.000 cycles
10(4)A 380VAC - 10.000 cycles
17(6)A 125VAC - 6.000 cycles
1HP 250VAC - 10.000 cycles
2HP 250VAC - 6.000 cycles
1/2HP 125VAC - 6.000 cycles
Ex. 15(6)A 250VAC means 15A resistive and 6A motor
- **lamp load** : 10A 125VAC and 250VAC - 10.000 cycles

Further specifications and dimensions, see 600H and 600NH series.
Available options for the 600SH series : T,TK, Luxe, G, GK, 1V, 2V

PART NUMBERS
Metal lever - Screw terminals + clamp - 600SH
Single pole : **631SH** (ON - OFF) - **636SH** (ON - ON)
Double pole : **641SH** (ON - OFF) - **646SH** (ON - ON)
Three pole : **651SH** (ON - OFF) - **656SH** (ON - ON)

Metal lever - Solder lugs / quick-connect terminals - 600SH/2
Single pole : **631SH/2** (ON - OFF) - **636SH/2** (ON - ON)
Double pole : **641SH/2** (ON - OFF) - **646SH/2** (ON - ON)
Three pole : **651SH/2** (ON - OFF) - **656SH/2** (ON - ON)

→ Keyway

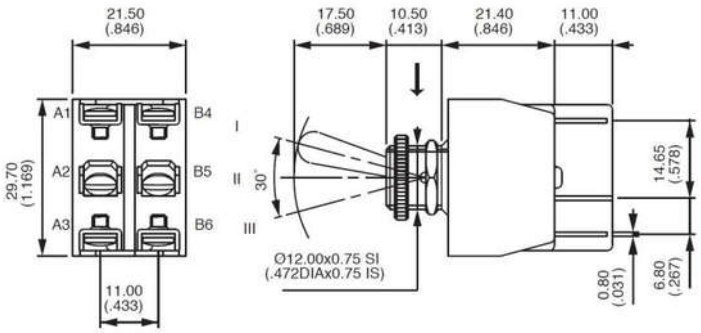

PANEL CUT-OUT

