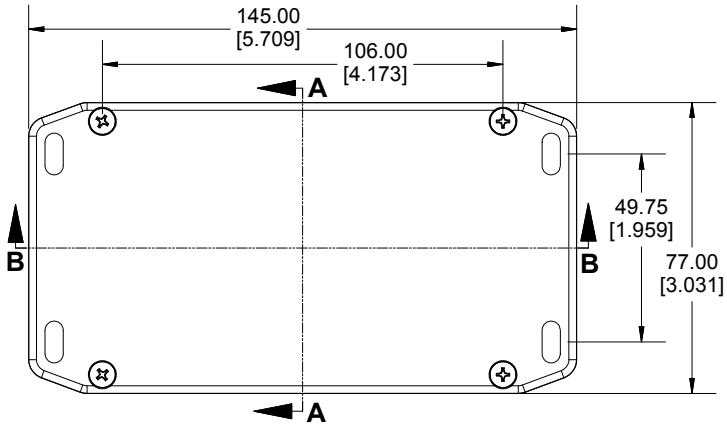


**TOP VIEW**

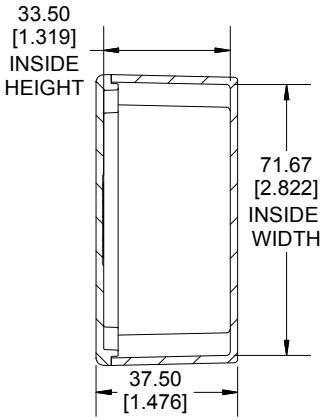


**SECTION A-A**
**END VIEW**

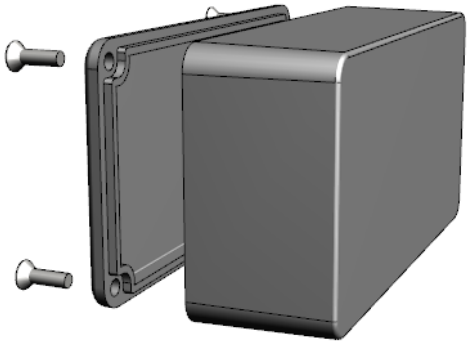

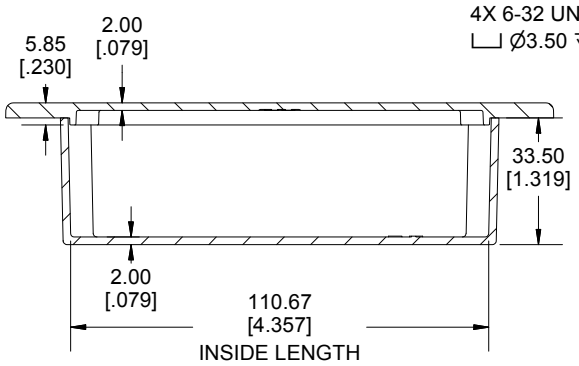


**SECTION B-B**
**SIDE VIEW**

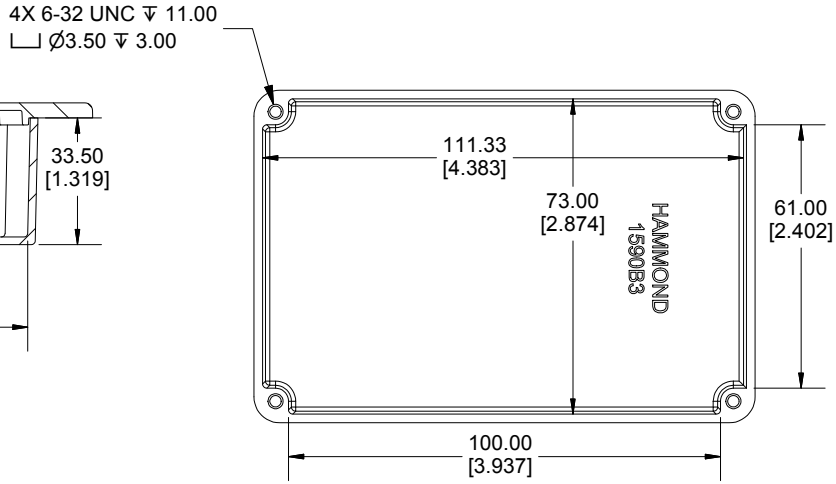


**INSIDE BOX**

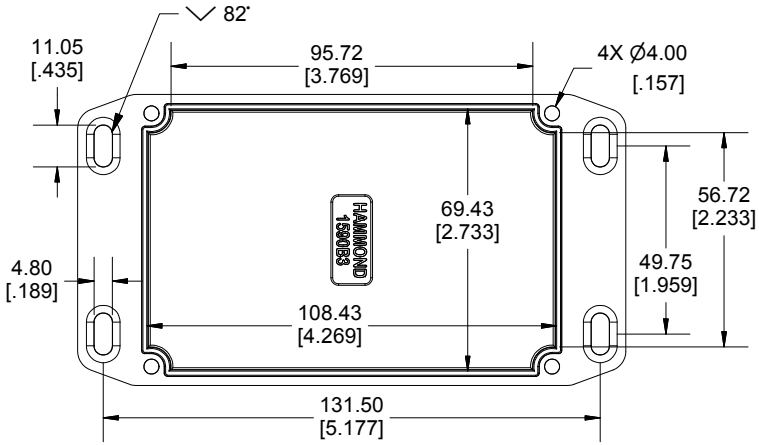


**INSIDE LID**

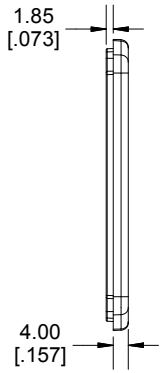


Enclosures can be Factory Modified ( Milling, Drilling, Printing etc.)
Contact Factory mjm@hammondmfg.com for quotes
Solid models of this enclosure available in STEP or IGES.
(Part number and text placement/orientation on our products are subject to change, we do not recommend using them as a locating reference for modification purposes)

| NOTE |
|---|
| Purchased assembly includes box, lid and 4 cover screws. |
| Box and lid are made from Diecast Aluminum Alloy. |
| Silicone Gasket supplied with liquid resistant enclosure. |
| **Recommended Torque: 50-55 cN.m [71-78 ozf.in]** |
| **Recommended Torque with Gasket : 25-30 cN.m [36-43 ozf.in]** |

| PART NUMBERS | |
|---|---|
| **1590B3FL Enclosure** | |
| **Natural Finish Enclosure** | 1590B3FL |
| **Black Textured Enclosure** | 1590B3FLBK |
| **1590B3FL Liquid Resistant Enclosure (Silicone Gasket)** | |
| **Natural Finish Enclosure** | 1590WB3FL |
| **Black Textured Enclosure** | 1590WB3FLBK |
| **ACCESSORIES** | |
| **Liquid Resistant Cover Screws** | |
| **Stainless Steel Cover Screws (Pkg 100) [6-32 x 1/2" With O-Ring]** | 1590WMS100 |
| **Black Stainless Steel Cover Screws (Pkg 100) [6-32 x 1/2" With O-Ring]** | 1590WMS100BK |
| **Standard Cover Screws** | |
| **Plated Cover Screws (Pkg 100) [6-32 x 1/2"]** | 1590MS100 |
| **Black Cover Screws (Pkg 100) [6-32 x 1/2"]** | 1590MS100BK |

**Dimensions:**
mm
[inches]

HAMMOND MANUFACTURING®

# 1590B3FL

**www.hammondmfg.com**