Coded Non-Contact Safety Sensor
Eden OSSD

Approvals:

Application:

- Door and hatches
- Position control
- Sector detection

Features:

- Non-contact detection, 0-15 mm
- OSSD outputs and inputs for serial connection
- High level coded
- Local reset function
- Protection class IP69K



Eden OSSD is a coded non-contact safety sensor used as interlocking device. Eden consists of Adam and Eva.

Highest level of safety with less devices

Eden OSSD makes it possible to reach a PLe:
- with only one Eden OSSD per guard and with no need for periodic checks (see ISO/TR 24119) and
- with up to 30 Eden OSSD connected in series.

With Eva Unique Code, Eden OSSD is a high level coded sensor to be used when the motivation to defeat the safety sensor has not been totally eliminated (see EN ISO 14119:2013).

Reduced installation time

A local reset light button can be connected directly to Adam OSSD-Reset, thus saving cable length and safety relays/PLC inputs. Adam OSSD-Reset monitors the reset function and manages the reset lamp. Eden OSSD large mounting tolerance, compact dimensions and 360° mounting possibility facilitate its placing. Its M12 connector speeds up installation and exchange.

Increased productivity

Eden OSSD extensive indication and information output facilitates troubleshooting, thus reducing downtime. The large sensing distance gives a better tolerance to vibrations and minimizes the risk of involuntary stops. With an IP69K protection class as standard and a wide operating temperature range, Eden OSSD withstands extreme environments.

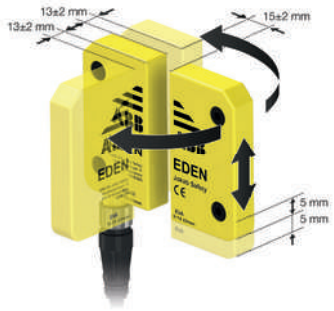

Flexible mounting and long sensing distance.



Serial connection of three Adam OSSD-Reset M12-8 through M12-3G and with individual Smile 12RG reset buttons.

Technical data – Eden OSSD

Level of safety	
IEC/EN 61508:2010	SIL3 PFH_D 4.5 x 10^{-9}
EN 62061:2005	SIL3
EN ISO 13849-1:2008	PL e/Cat. 4
EN 14119:2013	Type 4
	High level coded with Eva Unique
	Low level coded with Eva general
Power supply	
Rated operating voltage	24 VDC +15%-50%
Total current consumption	30 mA at 24 VDC
	35 mA at 18 VDC
	45 mA at 12 VDC
Information/reset (pin 5)	max 30 mA
Information (pin 8)	max 15 mA
(Info signal: + 24 VDC when OSSD high, 0 V otherwise)	
OSSD output (1 and 2)	Max 50 mA per output
Electrical data	
Transponder frequency	4 MHz
Max. switching frequency	1 Hz
Environmental data	
EMC	EN 60947-5-3:2013
Ambient temperature	-40°C … +70°C (Storage)
	-40°C … +70°C (Operation)
Humidity range	35 to 85%
	(no icing, no condensation)
Times	
Switch-on delay power on	2 s
Switch-on delay Eva in range	<100 ms
Switch-off delay Eva missing	< 30 ms
Risk time	< 30 ms
Mechanical data	
Colour	Yellow and grey text
Weight	Eva: 70 g Adam M12: 80 g
Protection class	IP67 and IP69K
Material	Housing: Polybutylene terephthalate (PBT)
	Moulding: Epoxy
Connector	M12 5-pole male. M12 8-pole male
Rated operating distance	0-15 ± 2 mm
	(Hysteresis 1-2 mm)
Assured release distance (Sar)	25 mm
Assured operating distance (Sao)	13 mm
Recommended distance	7-10 mm
The proximity of metal can influence the sensing distance. Use distance plates DA 1B to avoid it.	
Conformity	EN ISO 12100:2010
	EN ISO 13849-1:2008
	EN 62061:2005
	EN 60204-1:2006+A1:2009
	EN 60664-1:2007
	EN 61000-6-2:2005
	EN 61000-6-4:2007
	EN 60947-5-3:1999+A1:2005
	EN ISO 14119:2013

Connections Adam OSSD M12-8*	
White (1)	OSSD out 1
Brown (2)	+24 VDC
Green (3)	OSSD in 1
Yellow (4)	OSSD in 2
Grey (5)	Adam - Info: Information**
	Adam - Reset: Reset/Indication
Pink (6)	OSSD out 2
Blue (7)	0 V
Red (8)	Information**
Connections Adam OSSD M12-5*	
Brown (1)	+24 VDC
White (2)	OSSD out 1
Blue (3)	0 V
Black (4)	OSSD out 2
Grey (5)	Adam - Info: Information**
	Adam - Reset: Reset/indication
LED on Adam	
Green	Valid Eva within range (*Safety circuit closed*)
Flashing green	Valid Eva within range, waiting for reset (*Safety circuit open*)
Flashing red/green	Valid Eva within range, no valid in signal (*Safety circuit open*)
Red	Valid Eva out of range (*Safety circuit open*)
Fast flashing green	Valid Eva is within 2 mm from the maximum detection distance (*Safety circuit closed*)
Fast flashing red	Fail-safe mode (*Safety circuit open*)
Flashing red	No Eva programmed (*Safety circuit open*)
Flashing red/red/green	Input channel fault (*Safety circuit open*)

* Colours according to ABB Jokab Safety standard cables

** +24 VDC when OSSD high, 0 V otherwise

Eden dimensions

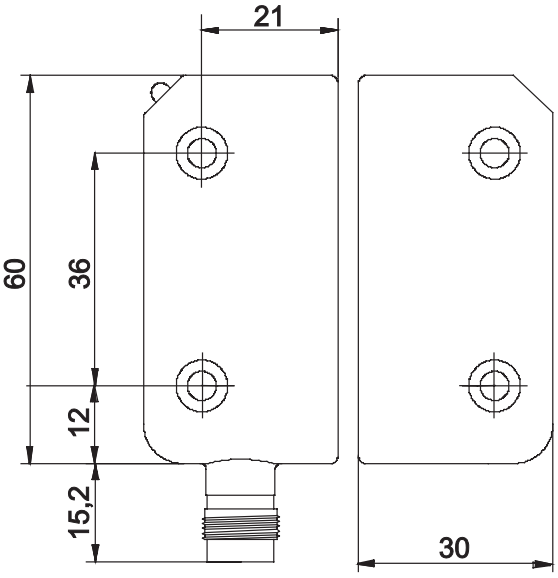

Adam OSSD-Reset

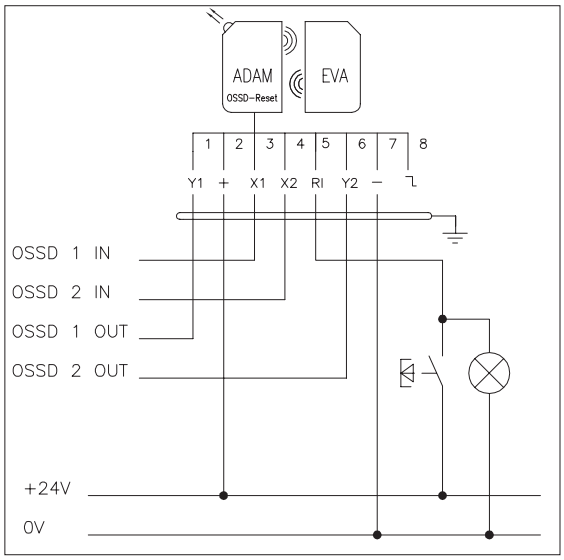

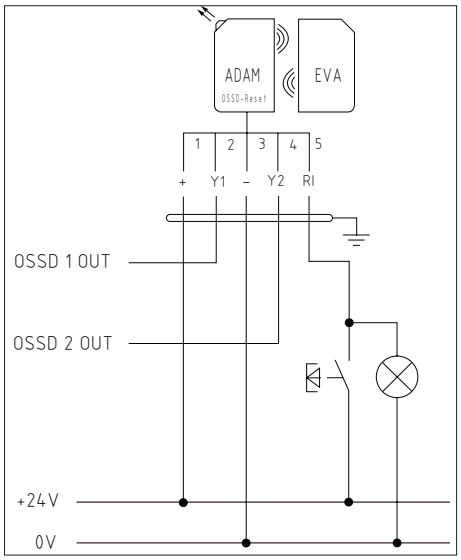

Several Adam OSSD-Info connected in series

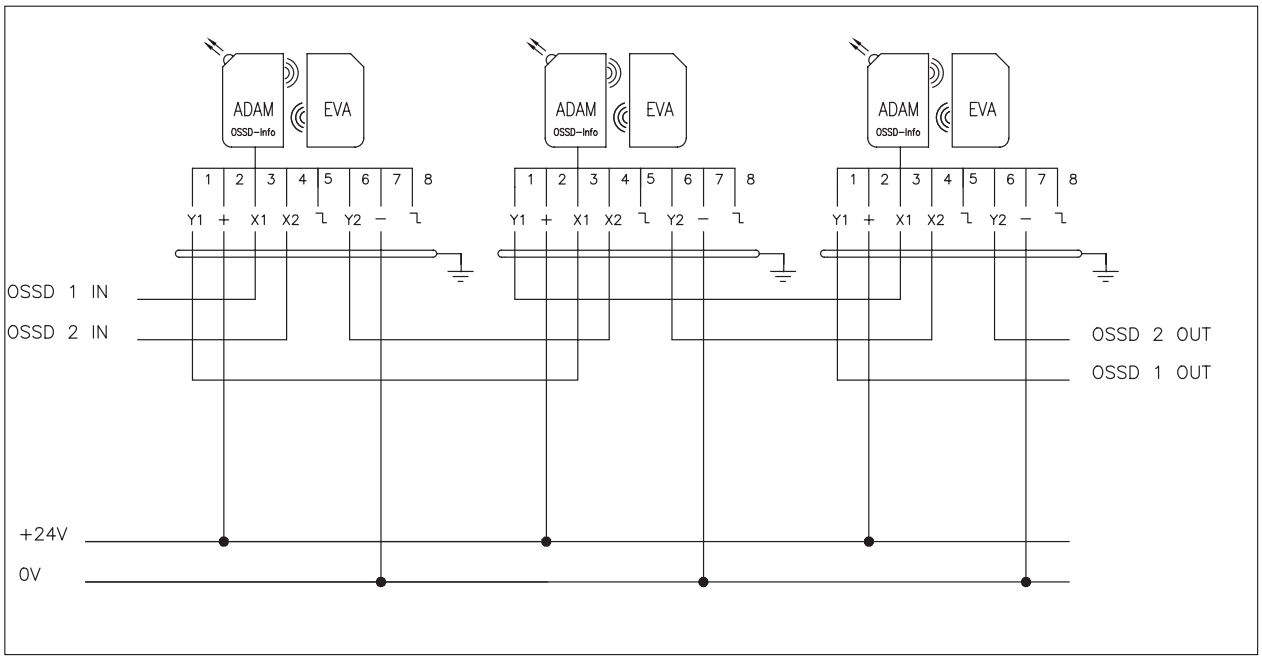

Note: It is possible to mix different models of Adam OSSD and Eva in the same circuit.

Models and ordering information

Adam OSSD-Info M12-5	2TLA020051R5400	Adam OSSD with M12-5 connector and information signal on pin 5.
Adam OSSD-Info M12-8	2TLA020051R5700	Adam OSSD with M12-8 connector and information signal on pin 5 and pin 8.
Adam OSSD-Reset M12-5	2TLA020051R5600	Adam OSSD with M12-5 connector and possibility to connect a reset button to pin 5.
Adam OSSD-Reset M12-8	2TLA020051R5900	Adam OSSD with M12-8 connector, possibility to connect a reset button to pin 5 and info signal on pin 8.
Eva General code	2TLA020046R0800	All Eva general code have the same code and can easily be replaced with each other.
Eva Unique code	2TLA020046R0900	Each Eva has a unique code. To be used when a high level coded sensor is necessary.

Accessories

DA 1	2TLA020053R0000	Distance plate in clear polycarbonate
SM4x20	2TLA020053R4200	Safety screw for mounting Adam and Eva
SBITS	2TLA020053R5000	Safety screwdriver bit
Smile 12RG Reset button	2TLA030053R2700	Reset button for Eden with 8 pins
Smile 12RF Reset button	2TLA030053R2600	Reset button for Eden with 5 pins
M12-3G	2TLA020055R0700	Y-connector for serial connection
Torque wrench	2TLA020053R0900	For M12 contact

Spare parts

DA 1B	2TLA020053R0700	Distance plate in yellow PBT. 4 pcs delivered with Adam.
DA 2B	2TLA020053R0300	Mounting spacer. 4 pcs delivered with Adam and 4 with Eva.

Cables

M12-C61	2TLA020056R0000	Straight M12-5 female connector with 6 m shielded cable
M12-C101	2TLA020056R1000	Straight M12-5 female connector with 10 m shielded cable
M12-C201	2TLA020056R1400	Straight M12-5 female connector with 20 m shielded cable
M12-C112	2TLA020056R2000	Straight M12-5 female and male connectors with 1 m shielded cable.*
M12-C312	2TLA020056R2100	Straight M12-5 female and male connectors with 3 m shielded cable.*
M12-C612	2TLA020056R2200	Straight M12-5 female and male connectors with 6 m shielded cable.*
M12-C1012	2TLA020056R2300	Straight M12-5 female and male connectors with 10 m shielded cable.*
M12-C2012	2TLA020056R2400	Straight M12-5 female and male connectors with 20 m shielded cable.*
M12-C63	2TLA020056R3000	Straight M12-8 female connector with 6 m shielded cable
M12-C103	2TLA020056R4000	Straight M12-8 female connector with 10 m shielded cable
M12-C203	2TLA020056R4100	Straight M12-8 female connector with 20 m shielded cable
M12-C134	2TLA020056R5000	Straight M12-8 female and male connectors with 1 m shielded cable.
M12-C334	2TLA020056R5100	Straight M12-8 female and male connectors with 3 m shielded cable.

* Shielded cable connected to pin 3 (0 V) on male connector.

ABB AB
Jokab Safety
Varlabergsvägen 11
SE-434 39 Kungsbacka
Tel. +46 (0) 21-32 50 00

www.abb.com/jokabsafety

Power and productivity
for a better world™

2TLC172074L0201