

Image may differ from product. See technical specification for details.

W 61903-2Z

Stainless steel deep groove ball bearing with integral sealing

Stainless steel single row deep groove ball bearing with seals or shields on both sides, provide greater chemical and corrosion resistance. As with deep groove ball bearings generally, they are particularly versatile, have low friction and are optimized for low noise and low vibration, which enables high rotational speeds. They accommodate radial and

axial loads in both directions, are easy to mount, and require less maintenance than other bearing types. The integral sealing can significantly prolong bearing service life because it keeps lubricant in the bearings and contaminants out.

- Greater chemical and corrosion resistance
- Integral sealing prolongs bearing service life
- Typical benefits of single row deep groove ball bearings

Overview

Dimensions

Bore diameter	17 mm
Outside diameter	30 mm
Width	7 mm

Performance

Basic dynamic load rating	3.97 kN
Basic static load rating	2.55 kN
Reference speed	50 000 r/min
Limiting speed	24 000 r/min

Properties

Filling slots	Without
Number of rows	1
Locating feature, bearing outer ring	None
Bore type	Cylindrical
Cage	Sheet metal
Matched arrangement	No
Radial internal clearance	CN
Material, bearing	Stainless steel
Coating	Without
Sealing	Shield on both sides
Sealing type	Non-contact
Lubricant	Grease
Relubrication feature	Without

Logistics

Product net weight	0.0162 kg
eClass code	23-05-08-01
UNSPSC code	31171504

Technical specification

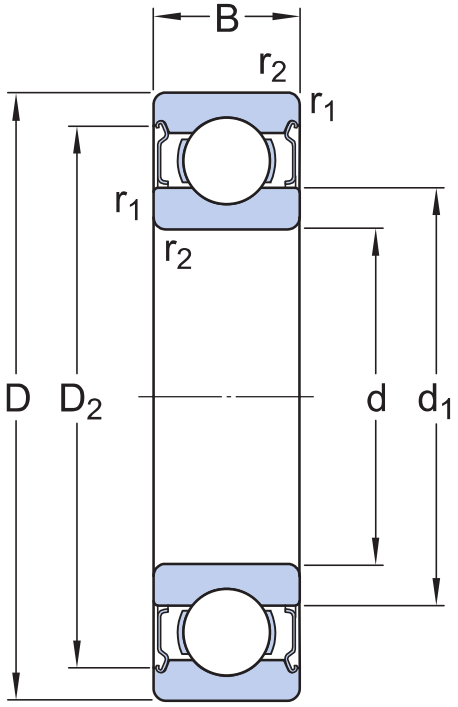

Dimensions

d	17 mm	Bore diameter
D	30 mm	Outside diameter
B	7 mm	Width
d_1	≈ 21 mm	Shoulder diameter
d_2	≈ 21 mm	Recess diameter
D_2	≈ 27.8 mm	Recess diameter
$r_{1,2}$	min. 0.3 mm	Chamfer dimension

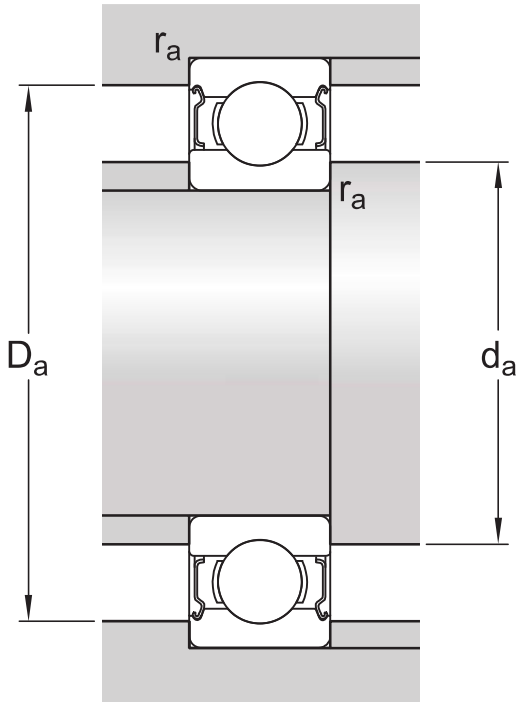

Abutment dimensions

d_a	min. 19 mm	Diameter of shaft abutment
d_a	max. 20.5 mm	Diameter of shaft abutment
D_a	max. 28.5 mm	Diameter of housing abutment
r_a	max. 0.3 mm	Radius of shaft or housing fillet

Calculation data

Basic dynamic load rating	C	3.97 kN
Basic static load rating	C_0	2.55 kN
Fatigue load limit	P_u	0.108 kN
Reference speed		50 000 r/min
Limiting speed		24 000 r/min
Minimum load factor	k_r	0.025
Calculation factor	f_0	14.8

Tolerance class

Dimensional tolerances	Normal

Radial run-out	Normal

Tolerances and clearances

GENERAL BEARING SPECIFICATIONS

- Tolerances: Normal (metric), P6, P5, Normal (inch)
- Radial internal clearance: Classes C2 to C5

BEARING INTERFACES

- Seat tolerances for standard conditions
- Tolerances and resultant fits

More Information

Product details

- Single row deep groove ball bearings
- Stainless steel deep groove ball bearings
- Single row deep groove ball bearings with filling slots
- Double row deep groove ball bearings
- General bearing specifications
- Loads
- Temperature limits
- Permissible speed
- Designation system

Engineering information

- Principles of rolling bearing selection
- General bearing knowledge
- Bearing selection process
- Bearing interfaces
- Seat tolerances for standard conditions
- Selecting internal clearance
- Lubrication
- Sealing, mounting and dismounting
- Bearing failure and how to prevent it

Tools

- SKF Product select
- SimPro Quick
- Bearing Frequency Calculator
- LubeSelect for SKF greases
- Heater selection tool

Terms of use

By accessing and using this website / app owned and published by AB SKF (publ.) (556007-3495 · Gothenburg) (“SKF”), you agree to the following terms and conditions:

Warranty Disclaimer and Limitation of Liability
Although every care has been taken to assure the accuracy of the information on this website / app, SKF provides this information "AS IS" and DISCLAIMS ALL WARRANTIES, EXPRESS OR IMPLIED, INCLUDING, BUT NOT LIMITED TO, IMPLIED WARRANTIES OF MERCHANTABILITY AND FITNESS FOR A PARTICULAR PURPOSE. You acknowledge that your use of this website / app is at your sole risk, that you assume full responsibility for all costs associated with use of this website / app, and that SKF shall not be liable for any direct, incidental, consequential, or indirect damages of any kind arising out of your access to, or use of the information or software made available on this website / app.

Any warranties and representations in this website / app for SKF products or services that you purchase or use will be subject to the agreed upon terms and conditions in the contract for such product or service.

Further, for non-SKF websites / apps that are referenced in our website / app or where a hyperlink appears, SKF makes no warranties concerning the accuracy or reliability of the information in these websites / apps and assumes no responsibility for material created or published by third parties contained therein. In addition, SKF does not warrant that this website / app or these other linked websites / apps are free from viruses or other harmful elements.

Third Party Services
When viewing YouTube content via the SKF website(s) (i.e. using YouTube API Services), you agree to be bound by the YouTube Terms of Service.

Copyright
Copyright in this website / app copyright of the information and software made available on this website / app rest with SKF or its licensors. All rights are reserved. All licensed material will reference the licensor that has granted SKF the right to use the material. The information and software made available on this website / app may not be reproduced, duplicated, copied, transferred, distributed, stored, modified, downloaded or otherwise exploited for any commercial use without the prior written approval of SKF. However, it may be reproduced, stored and downloaded for use by individuals without prior written approval of SKF. Under no circumstances may this information or software be supplied to third parties.

This website /app includes certain images used under license from Shutterstock, Inc.

Trademarks and Patents
All trademarks, brand names, and corporate logos displayed on the website / app are the property of SKF or its licensors, and may not be used in any way without prior written approval by SKF. All licensed trademarks published on this website / app reference the licensor that has granted SKF the right to use the trademark. Access to this website / app does not grant to the user any license under any patents owned by or licensed to SKF.

Changes
SKF reserves the right to make changes or additions to this website / app at any time.