Instruction Leaflet

# 3½ DIGIT LCD DPM

## DPM 125 RS **stock no. 257-212**

- Ultra compact
- 12.5mm Digits
- Ultra low power
- Snap-in bezel

A uniquely compact LCD DPM ideally suited for low or high volume applications featuring an exceptionally large display in a sub-miniature package. The meter will plug directly into a SIL socket or can be panel mounted using the snap-in bezel provided. The low profile bezel incorporates a flat reverse printed window giving a superb appearance that cannot be damaged or rubbed off by contact.

This DPM features Auto-zero, Auto-polarity, 200mV FSD, 12.5mm Digit height, Low battery indication and logic selectable decimal points. On-card solder pads for essential inter-connections make selection of the operating mode quick and easy with the minimum of external wiring. Very low current consumption allows long battery life making it especially useful in portable equipment.

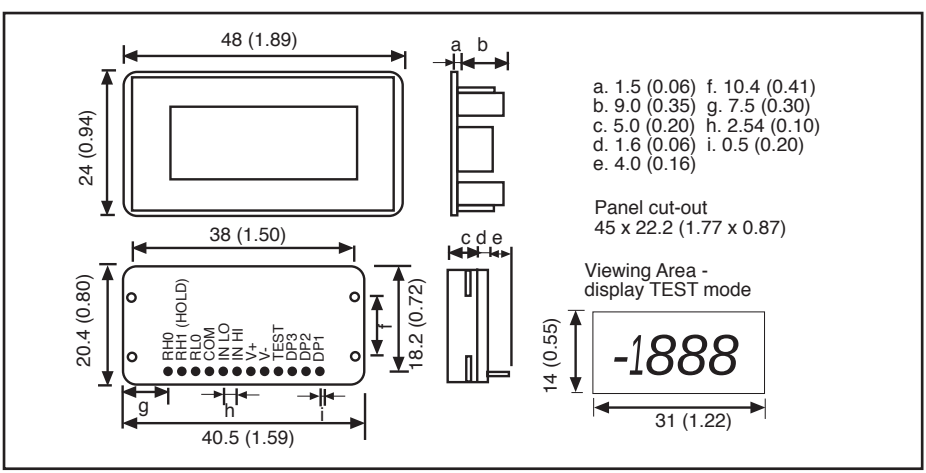

## PIN Functions

1. DP1. 199.9
2. DP2. 19.99
3. DP3. 1,999

} Connect to V+ to display required DP.

4. TEST. Connect to V+ to display segments as illustrated. It should not be operated for more than a few seconds as the d.c. voltage applied to the LCD may "burn" the display. This pin is normally at 5V below V+ and is the ground for digital section of the meter. It can be used to power external logic up to a maximum of 1mA.
5. V-. Negative power supply.
6. V+. Positive power supply.
7. IN HI. Positive measuring input.
8. IN LO. Negative measure input.
9. AN COM. The ground for the analogue section of the converter, held actively at 2.8V (Nom) below V+. AN COM must not be allowed to sink excessive current (>100µA) by connecting it directly to a higher voltage.
10. REF LO. Negative input for the reference voltage (can be connected to AN COM via Link 3).
11. REF HI. Positive input for reference voltage (connected via Link 1 to REF OUT).
12. REF OUT. Positive output from internal reference.

## Circuit Diagram

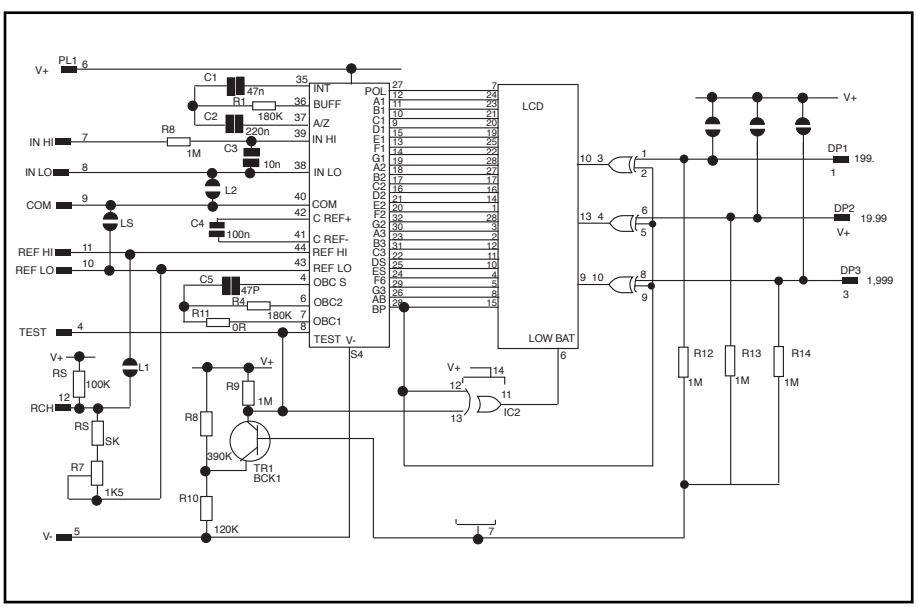

## Component Layout

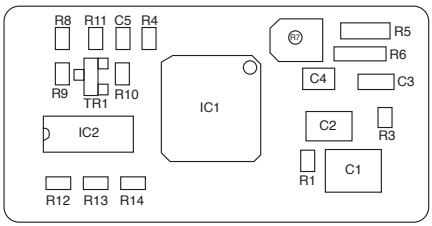


## Applications

Input scaling: Two resistors may be used to alter the full scale reading of the meter - See table.

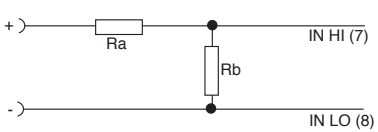


| Required F.S.R. | Ra | Rb |
|---|---|---|
| 2V | 910K | 100K |
| 20V | 1M | 10K |
| 200V | 1M | 1K |
| 2000V | 1M | 100R |
| 200µA | LINK | 1K |
| 2mA | LINK | 100r |
| 20mA | LINK | 10R |
| 200mA | LINK | 1R |

## Analogue inputs

IN HI, IN LO and REF LO are different inputs. They respond only to the voltage across them and not their voltage with respect to the power supply. However, no input must be higher than 0.5V below V+ or lower than 1.0V above V -. If the power supply is floating with respect to the circuit being monitored, connect IN LO and REF LO to AN COM for best results. If there is any danger that an input may be taken beyond the power supply rails, a series resistor MUST be fitted to limit the input current to less than 100µA.

## Circuit connections

The DPM can be configured for any of the applications shown below. Interconnections can be made by one of two methods:

1. Via the user's conditioning PCB, terminating at the DPM edge connector.
2. Bridging solder across the appropriate solder pad links provided (see circuit diagram).

## Panel fitting

Fit the bezel to the front of the panel and then locate the meter into the bezel from behind. Alternatively the meter and bezel may be assembled before fitting into the front of the panel but care must be taken not to use excessive force.

# 8105

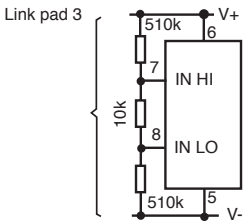


Measuring a supply voltages.
(min 7.5V, max 15V).

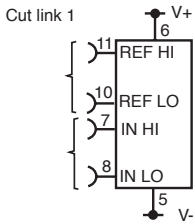


Measuring the ratio of two voltages.
Reading = 1000 V2/V1

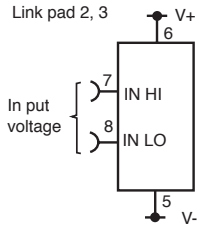


Measuring a floating voltage source of 200mV full

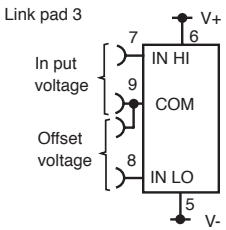


Zero display when the applied input is not zero, the offset and input voltages should be applied as shown.

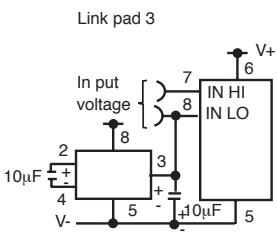


Measuring a single ended input reference to supply.
**Note:** 7660 is a +5V DC to -5V DC voltage converter.
See Semiconductors section of the **RS** catalogue

| Specification | Min. | Typ. | Max. | Unit |
|---|---|---|---|---|
| Accuracy (± 1 count) σ | | 0.05 | 0.1 | % |
| Linerity | | | ±1 | Count |
| Sample rate | | 3 | | per sec |
| Temp Stability | | 100 | | ppm/°C |
| Temp range | 0 | | 50 | °C |
| Supply voltage (V+ to V-) | 7.5 | 9 | 15 | V |
| Supply current | | 150 | | µA |
| Max. d.c. input voltage | | | ±20 | V |
| Input leakage current (Vin = 0V) | | 1 | 10 | pA |
| Low battery threshold | | 7.5 | | V |


The information provided in RS technical literature is believed to be accurate and reliable; however, RS Components assumes no responsibility for inaccuracies or omissions, or for the use of this information, and all use of such information shall be entirely at the user's own risk.
No responsibility is assumed by RS Components for any infringements of patents or other rights of third parties which may result from its use.
Specifications shown in RS Components technical literature are subject to change without notice.




© RS Components 1997