# O6H404

## Diffuse reflection sensor with background suppression

O6H-FPKG/0,30m/US

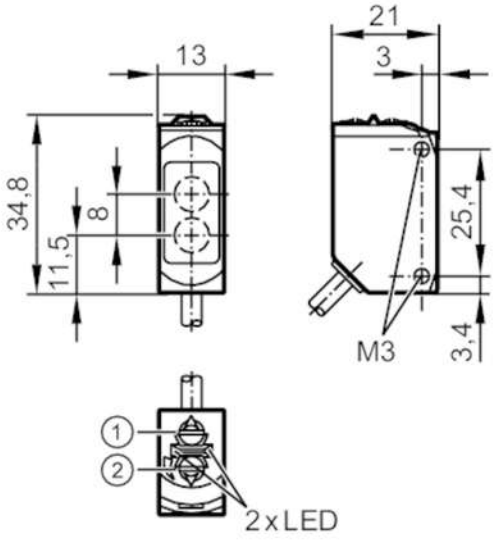


1: output function switch
2: potentiometer sensitivity

| | | |
|---|---|---|
| **Product characteristics** | | |
| Type of light | | red light |
| Housing | | rectangular |
| **Application** | | |
| Special feature | | Background suppression |
| Function principle | | Diffuse reflection sensor |
| Application | | suited for use in the machine tool industry |
| **Electrical data** | | |
| Operating voltage | [V] | 10...30 DC |
| Current consumption | [mA] | 22;  ((24 V)) |
| Protection class | | III |
| Reverse polarity protection | | yes |
| Type of light | | red light |
| Wave length | [nm] | 633 |
| **Outputs** | | |
| Electrical design | | PNP |
| Output function | | light-on/dark-on mode;  (selectable) |
| Max. voltage drop switching output DC | [V] | 2.5 |
| Permanent current rating of switching output DC | [mA] | 100 |
| Switching frequency DC | [Hz] | 1000 |
| Short-circuit protection | | yes |
| Type of short-circuit protection | | pulsed |

# O6H404

## Diffuse reflection sensor with background suppression

O6H-FPKG/0,30m/US

| | | | |
|---|---|---|---|
| **Detection zone** | | | |
| Range | [mm] | 2...200;  (white paper 200 x 200 mm) | |
| Range on white object (90 % remission) | [mm] | 2...200 | |
| Range on grey object (18 % remission) | [mm] | 4...200 | |
| Range on black object (6 % remission) | [mm] | 8...200 | |
| Range adjustable | | yes | |
| Max. light spot diameter | [mm] | 8 | |
| Light spot dimensions refer to | | at maximum range | |
| Background suppression available | | yes | |
| **Operating conditions** | | | |
| Ambient temperature | [°C] | -25...60 | |
| Protection | | IP 65; IP 67; IP 68 | |
| **Tests / approvals** | | | |
| EMC | | EN 60947-5-2 | |
| MTTF | [years] | 698 | |
| UL approval | | UL Approval no. | E023 |
| **Mechanical data** | | | |
| Weight | [g] | 49.9 | |
| Housing | | rectangular | |
| Dimensions | [mm] | 34.8 x 13 x 21 | |
| Materials | | housing: stainless steel (316L/1.4404); plastics: PPSU; Sealing: FKM | |
| Lens material | | PMMA | |
| Lens alignment | | side lens | |
| Tightening torque | [Nm] | 1;  (screws) | |
| **Displays / operating elements** | | | |
| Display | | switching status | 1 x LED, yellow |
| | | operation | 1 x LED, green |
| **Remarks** | | | |
| Remarks | | operating voltage "supply class 2" according to cULus | |
| Pack quantity | | 1 pcs. | |

**Electrical connection**

Cable: 0.3 m, PUR; 3 x 0.25 mm²

Connector: 1 x M12; coding: A

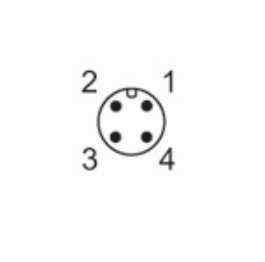

# O6H404

## Diffuse reflection sensor with background suppression

O6H-FPKG/0,30m/US

### Connection

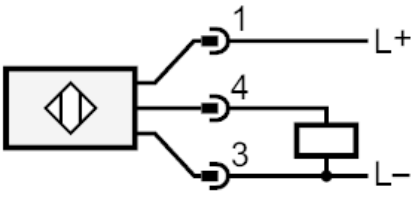


### Diagrams and graphs

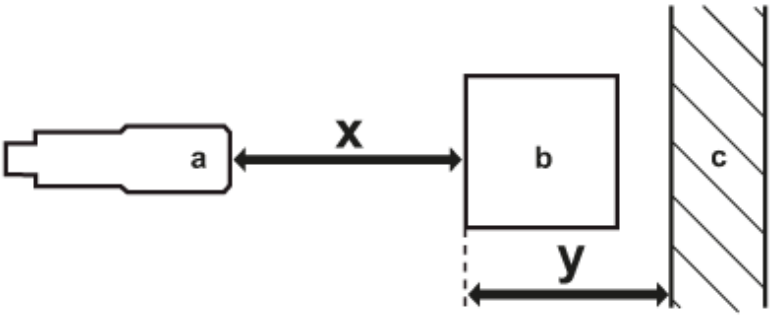


a: sensor
b: object
c: background
x: distance sensor/object [mm]
y: min. distance object/background [mm]

# O6H404

## Diffuse reflection sensor with background suppression

**O6H-FPKG/0,30m/US**

accuracy graph

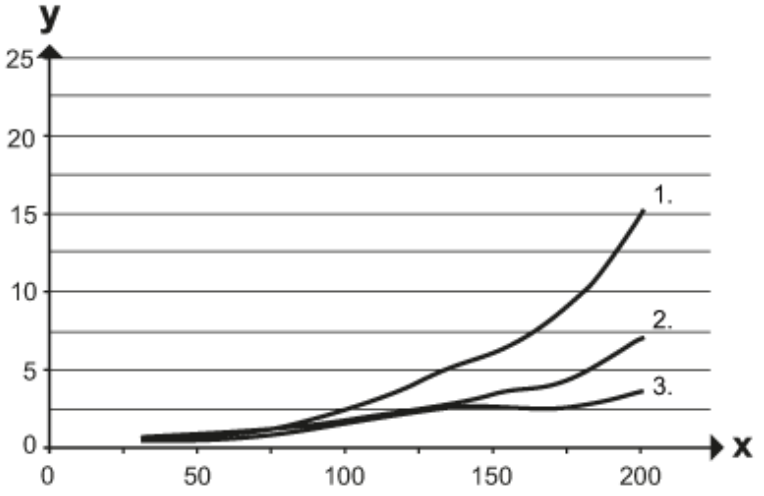


x: distance sensor/object [mm]

y: min. distance object/background [mm]

1 = object black (6 % remission) , background white (90 % remission)

2 = object grey (18 % remission) , background white (90 % remission)

3 = object white (90 % remission) , background white (90 % remission)