

4600X Series Tubeaxial

119x119x38mm

- AC fans with external rotor shaded-pole motor. Impedance protected against overloading.
- Metal fan housing and impeller.
- Air intake over struts. Rotational direction CW looking at rotor.
- Mounting from either face using four 4.3 mm holes.
- Electrical connection: Terminals with 2 flat pins 2.8 x 0.5 mm.
- Fan housing with ground lug for screw M4 and UNC.
- Mounting: Either face using four 3.7mm (.146") holes..
- UL, CSA, VDE approvals on some models, please contact application engineering.

Part Number	CFM @ 0	Curve	Volts	Hertz	Power (W)	dBA	Max Ambient Temp C	Wgt. (lbs)	Type Of Bearing	Features
4600X	106	2	115	50/60	18	50	60	1.19	Sintec	Terminals
4600XP	106	2	115	50/60	18	50	60	1.19	Sintec	Terminals
4606X	106	2	115	50/60	18	51	90	1.19	Ball	Terminals
4650X	106	2	230	50/60	18	50	60	1.19	Sintec	Terminals
4656X	106	2	230	50/60	18	51	90	1.19	Ball	Terminals

Note: 4600XP has a 5 year warrenty.

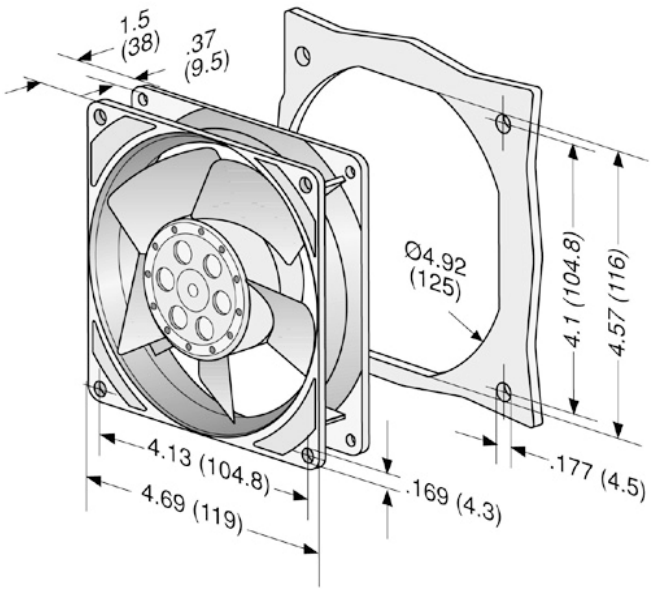

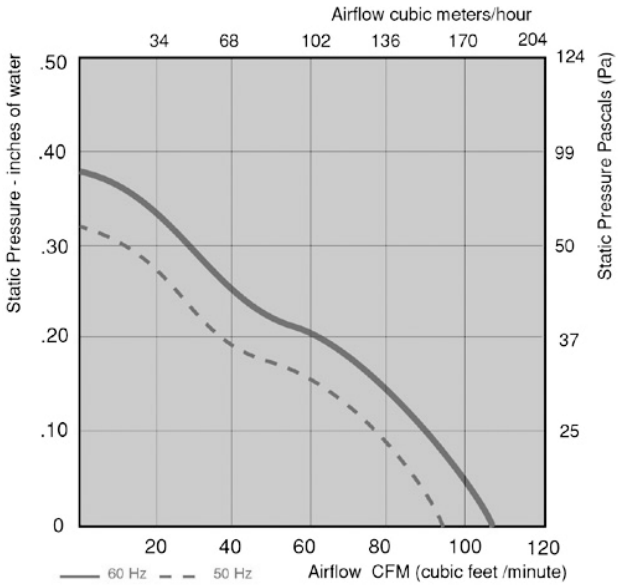

ebm INDUSTRIES, INC.

e-mail: sales@ebm.com · TEL: 860-674-1515 · FAX: 860-674-8536
ebm Industries, Inc., 100 Hyde Road, Farmington, CT 06034 USA
ebm Industries, Inc., 2003 © ebm Industries, Inc. reserves the right to change any specifications or data without notice