PV7003

Pressure switch with IO-Link

PV-025-SEG14-UFRVG/US/ /

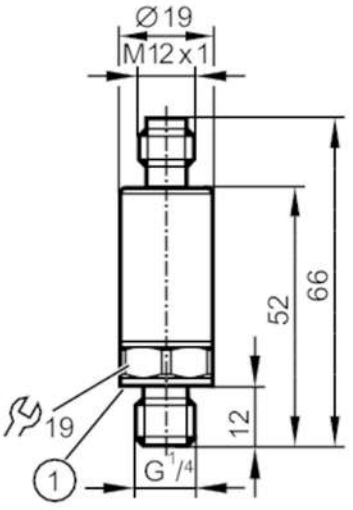

1 Sealing

Product characteristics			
Number of inputs and outputs	Number of digital outputs: 2		
Measuring range	-1...25 bar	-14.6...362.6 psi	-0.1...2.5 MPa
Process connection	threaded connection G 1/4 external thread (DIN EN ISO 1179-2); internal thread:M5		
Application			
Measuring element	metallic thin film cell		
Application	for industrial applications		
Media	liquids and gases		
Medium temperature [°C]	-40...90		
Min. bursting pressure	600 bar	8700 psi	60 MPa
Pressure rating	65 bar	940 psi	6.5 MPa
Note on pressure rating	static		
Vacuum resistance	-1000 mbar	-0.1 MPa	
Type of pressure	relative pressure; vacuum		
Electrical data			
Operating voltage [V]	18...30 DC		
Current consumption [mA]	< 15		
Min. insulation resistance [MΩ]	100; (500 V DC)		
Protection class	III		
Reverse polarity protection	yes		
Power-on delay time [s]	< 0.3		
Inputs / outputs			
Number of inputs and outputs	Number of digital outputs: 2		
Outputs			
Total number of outputs	2		
Output signal	switching signal; IO-Link; (configurable)		
Electrical design	PNP/NPN		
Number of digital outputs	2		

PV7003

Pressure switch with IO-Link

PV-025-SEG14-UFRVG/US/ /

Output function	normally open / normally closed; (parameterisable)		
Max. voltage drop switching output DC [V]	2		
Permanent current rating of switching output DC [mA]	100		
Switching frequency DC [Hz]	< 170		
Short-circuit protection	yes		
Type of short-circuit protection	pulsed		
Overload protection	yes		
Measuring/setting range			
Measuring range	-1...25 bar	-14.6...362.6 psi	-0.1...2.5 MPa
Set point SP	-0.75...25 bar	-10.8...362.6 psi	-0.075...2.5 MPa
Reset point rP	-0.87...24.88 bar	-12.7...360.8 psi	-0.087...2488 MPa
In steps of	0.01 bar	0.1 psi	0.001 MPa
Factory setting	SP1 = 6.25 bar	rP1 = 5.75 bar	ou1 = Hno;
	SP2 = 18.75 bar	rP2 = 18.25 bar	ou2 = Hno;
	dS1/dS2 = 0 ms	dr1/dr2 = 0 ms	
	coF = 0 %	P-n = PnP	dAP= 60 ms
Accuracy / deviations			
Switch point accuracy [% of the span]	< ± 0,5 (nach DIN EN 61298-2)		
Repeatability [% of the span]	< ± 0,05; (with temperature fluctuations < 10 K)		
Characteristics deviation [% of the span]	< ± 0,5; (linearity incl. hysteresis and repeatability, limit value setting to DIN EN IEC 62828-1)		
Linearity deviation [% of the span]	< ± 0,1 (BFSL) / < ± 0,2 (LS)		
Hysteresis deviation [% of the span]	< ± 0,2		
Long-term stability [% of the span]	< ± 0,1; (per 6 months)		
Temperature coefficient zero point [% of the span / 10 K]	< 0,1 (-25...90 °C) / < 0,2 (-40...-25 °C)		
Temperature coefficient span [% of the span / 10 K]	< 0,1 (-25...90 °C) / < 0,2 (-40...-25 °C)		
Response times			
Response time [ms]	< 3		
Software / programming			
Parameter setting options	hysteresis / window; normally open / normally closed; switching logic; switch-on/switch-off delay; Damping		
Interfaces			
Communication interface	IO-Link		
Transmission type	COM2 (38,4 kBaud)		
IO-Link revision	1.1		
SDCI standard	IEC 61131-9		
Profiles	Smart Sensor: Process Data Variable; Device Identification, Device Diagnosis		

PV7003

Pressure switch with IO-Link

PV-025-SEG14-UFRVG/US/ /

SIO mode		yes	
Required master port type		A	
Process data analogue		2	
Process data binary		2	
Min. process cycle time	[ms]	5	
Supported DeviceIDs		**Type of operation**	**DeviceID**
		default	712
Operating conditions			
Ambient temperature	[°C]	-40...90	
Storage temperature	[°C]	-40...100	
Protection		IP 67; IP 69K	
Tests / approvals			
EMC		DIN EN 61326-1	
Shock resistance		DIN EN 60068-2-27	500 g (1 ms)
Vibration resistance		DIN EN 60068-2-6	20 g (10...2000 Hz)
MTTF	[years]	667.77	
UL approval		UL Approval no.	J015
Pressure Equipment Directive		Sound engineering practice; can be used for group 2 fluids; group 1 fluids on request	
Mechanical data			
Weight	[g]	63	
Housing		cylindrical	
Dimensions	[mm]	Ø 19 / L = 66	
Materials		stainless steel (630/1.4542/17-4 PH); stainless steel (316L/1.4404); PEI	
Materials (wetted parts)		stainless steel (303/1.4305); stainless steel (630/1.4542/17-4 PH)	
Min. pressure cycles		60 million; (at 1.2 times nominal pressure)	
Tightening torque	[Nm]	25...35; (recommended tightening torque; depends on lubrication, seal and pressure rating)	
Process connection		threaded connection G 1/4 external thread (DIN EN ISO 1179-2); internal thread:M5	
Process connection sealing		FKM (DIN EN ISO 1179-2)	
Restrictor element integrated		yes	
Remarks			
Remarks		BFSL = Best Fit Straight Line	
		LS = limit value setting	
Pack quantity		1 pcs.	

Electrical connection

Connector: 1 x M12; coding: A

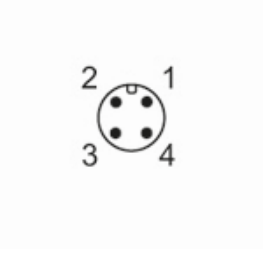

PV7003

Pressure switch with IO-Link

PV-025-SEG14-UFRVG/US/ /

Connection

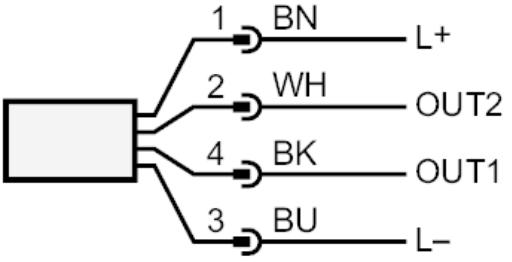

OUT1	switching output IO-Link
OUT2	switching output
	colours to DIN EN 60947-5-2
	Core colours :
BK =	black
BN =	brown
BU =	blue
WH =	white