E11290

Mounting base

MOUNTING BASE M20 IDE/KDE

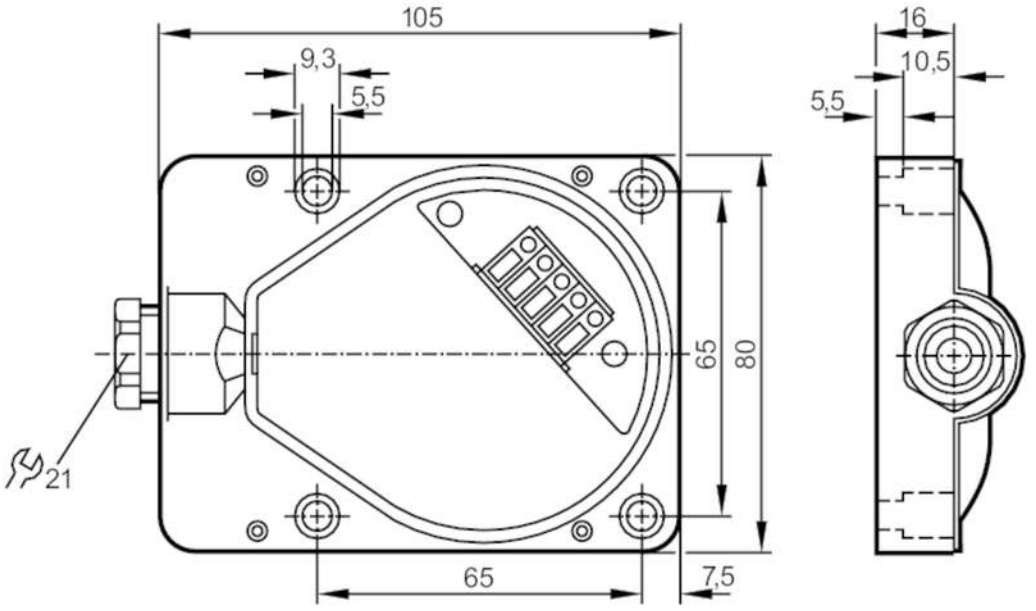

Mechanical data		
Weight	[g]	65.2
Dimensions	[mm]	80 x 105 x 16
Materials		PPE

Remarks	
Pack quantity	1 pcs.