Pump-Alternator - GAMMA series

G2ASMA20

- Alternated access of two pumps or other devices
- Even distribution of duty
- Parallel duty at high demand
- Operation using 1 or 2 input signals (two modes of operation)
- Timing offset of the two loads to avoid water hammer effcects
- Supply voltage selectable via TR2 power modules
- 2 separate change over relays for device control
- Width 22.5mm
- Industrial design



Technical data

1. Function

One of two redundant motors will operate on demand signalised by input Y1.
Successive requests will operate the motors in an alternating sequence (sharing the duty between the devices).
On demand both devices (pumps) will operate in parallel:

Mode A (parallel operation by separate input signal):
Input Y2 initiates parallel operation. Without signal at input Y2, only one single motor will operate at each request.
Mode B (parallel operation by timing):
If an operation request on input Y1 exceeds the ajdusted delay, the unit will start the second motor for parallel operation.

2. Time ranges

	Adjusment range	
t1 (for parallel operation)	2s	5min (use for mode B only)
t2 (offset timing)	2s fixed	

3. Indicators

Green LED U/t ON:	indication of supply voltage
Green LED U/t flashing:	indication of time periode t1 or t2
Red LED Failure:	irregular input; Y2 is activ while Y1 is off
Yellow LED Rel. 1 ON/OFF:	indication of relay output Rel. 1
Yellow LED Rel. 2 ON/OFF:	indication of relay output Rel. 2

4. Mechanical design

Self -extinguishing plastic housing, IP rating IP 40
Mounted on DIN-rail TS 35 according to EN 50022
Mounting position : any
Shockproof terminal connection according to VBG 4 (PZ1 required)
IP rating IP20
Tightening torque: 1 Nm max.
Terminal capacity:
- 1 x 0.5 bis 2.5mm2 with/without multicore cable end
- 1 x 4mm2 without multicore cable end
- 2 x 0.5 bis 1.5mm2 with/without multicore cable end
- 2 x 2.5mm2 flexible without multicore cable end

5. Input circuit

Supply voltage:

12 to 400V AC	terminals A1-A2 (galvanically separated) selectable by powermodule typeTR2
Tolerance:	according to specification of power module
Rated frequency:	according to specification of power module
Rated consumption:	2VA (1.5W)
Duty cycle:	100%
Reset time:	500ms
Residual ripple for DC:	-
Drop out voltage:	> 30% of nominal supply voltage
Overvoltage category:	III (according to IEC 60444-1)
Rated surge voltage:	4kV

6. Output circuit

2 potential free change over contacts

Rated voltage:	250V AC
Switching capacity (distance <5mm):	750VA (3A / 250V)
Switching capacity (distance >5mm):	1250VA (5A / 250V)
Fusing:	5A fast acting
Mechanical life:	$20x10^6$ operations
Electrical life	$2x10^5$ operations at 1000VA resistive load
Switching frequency:	max. 60/min at 100VA at resistive load max. 6/min at 1000VA at resistive load according to IEC 947-5-1)
Over-voltage category:	III (according to IEC 60664-1)
rated surge voltage:	4kV

7. Control inputs

Y1 operation request:	activation by link Y1-Y3
Y2 parallel operation:	activation by link Y2-Y3 (mode A only)
Potential free:	yes, seperated from supply input and output circuit by basic insulation
Loadable:	no
Control voltage:	10V max.
Schort circuit current:	1mA max.
Wiring length:	10m max.
Coltrol pulse length :	50ms min.

8. Accuracy

Adjustment accuracy (t1):	±5s in the Range up to 30s ±30s in the Range above 30s
Repetition accuracy:	≤5% of set value

9. Ambient conditions

Ambient temperature:	-25 to +55°C (according to IEC 68-1)
Storage temperature:	-25 to +70°C
Transport temperature:	-25 to +70°C
Relative humidity:	15% to 85% (according to IEC 721-3-3 Klasse 3k3)
Pollution degree:	3 (according to IEC 60664-1)
Vibration resistance:	10 to 55 Hz 0.35mm (according to IEC 68-2-6)
Shock resistance:	15g 11ms (according to IEC 68-2-27)

Subject to alternations and errors Änderungen und Irrtümer vorbehalten

G2ASMA20

☛Functions

The Pump-Alternator is sensitive to one (mode B) or two (mode A) digital input signals. Each of the two output relays activates one of the two devices (usually pumps or motors) driven. The two outputs (Rel.1 and Rel. 2), are equally configured and interchangeable. In case of request for operation (Y1-Y3 linked by external contact) one of the output relays energises as long as the signal persists on input (Y1). Next time there is a request for operation the alternate output operates in the same manner. This way both connected devices (pumps or motors) will share load.
The information about, which output has done the first cycle after a power reset, is stored in a non-volatile memory. Next time after a power reset the other output will do the first cycle.
There is no definite delivery status about which of the two outputs will operate at the first occasion.
Mode and time setting can be done with a screwdriver at the front of the G2ASMA20.

Mode A (parallel operation triggered by input Y2)
In this mode both outputs are activated in parallel, if the input for parallel operation (Y2-Y3) is engaged in addition to the contact for operation request (Y1-Y3).
If both inputs are activated or deactivated simultaneously, the output relays will be activated or deactivated with a fixed timing offset of 2 seconds to avoid water hammer effects and excessive electrical load peaks.
Without activating the input for parallel operation the two outputs are activated one by one only, but never in parallel.

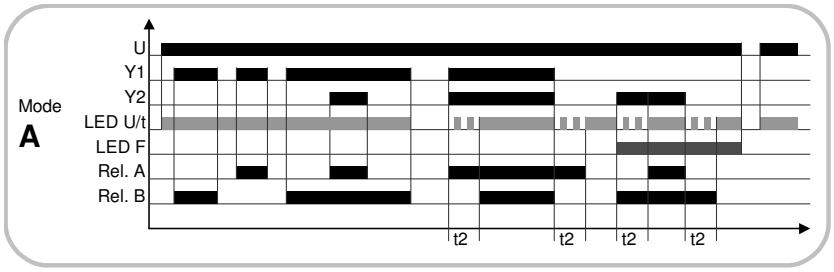

Mode B (parallel operation by timing)
In this mode the timing dial is set to any position unlike the "Function A" setting.
An uninterrupted operation request that is longer request than the adjusted delay t1 will activate the second output relay for parallel operation. At the end of a period of parallel operation the output added after the delay t1 will drop immediately. The other relay, active from begin of the request, will drop with offset of the fixed delay t2.

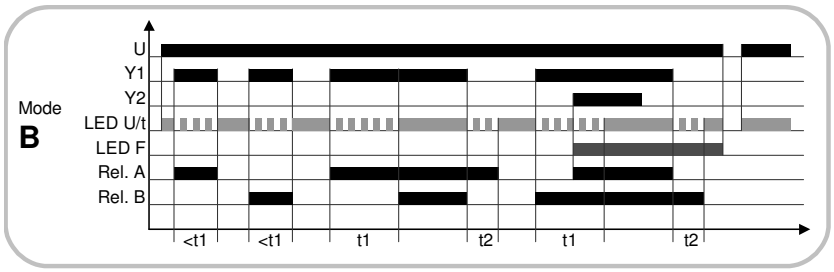

Function control by supplied power
With a link wired at the input for operation request (Y1-Y3) alternate operation is activated by supplying the auxiliary voltage to the unit.
Using the Mode B setting on the dial (any time setting) the second relay will activate after the set delay for parallel operation (t1). When supply is disconnected, both reays drop immediately. There is no parallel operation in mode A as it is not recommended to use the contact Y2 in case of control by supplied power.

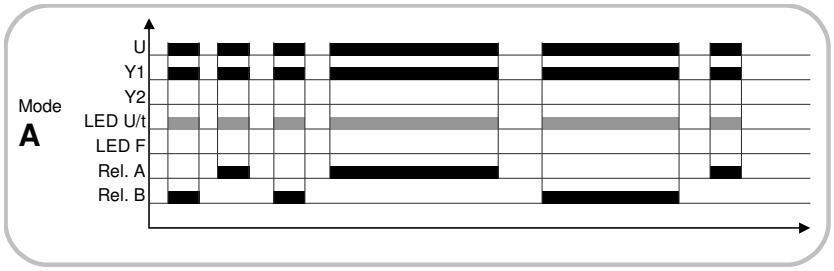

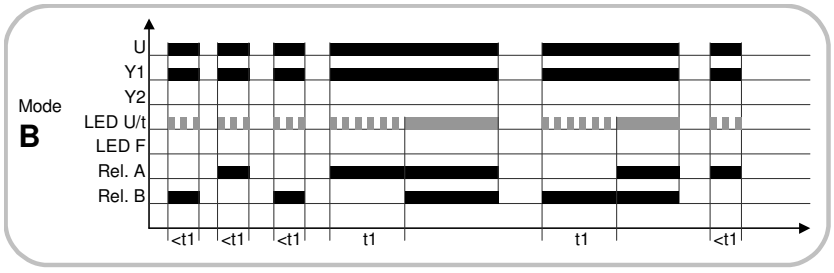

The highest priority is on the input for parallel operation (link Y2-Y3). If activated it will cause operation of both outputs anyway, with the fixed offset delay t2 only. The error indication on the unit will be illuminated if this input is active, unless there is a signal for the operation request input (Y1-Y2). (A defect sensor is assumed in this case) The input parallel operation (Y2-Y3) activated when the unit is set up for mode B will cause an error indication in any case.
The error indication will stay visible even if the proper correlation of operation request (Y1-Y2) and request for parallel operation (Y2-Y3) is re-established. (The unit falls back to normal operation in this case.) The error message is cleared by interrupting supply voltage.

Subject to alternations and errors
Änderungen und Irrtümer vorbehalten

Connections

Mode A

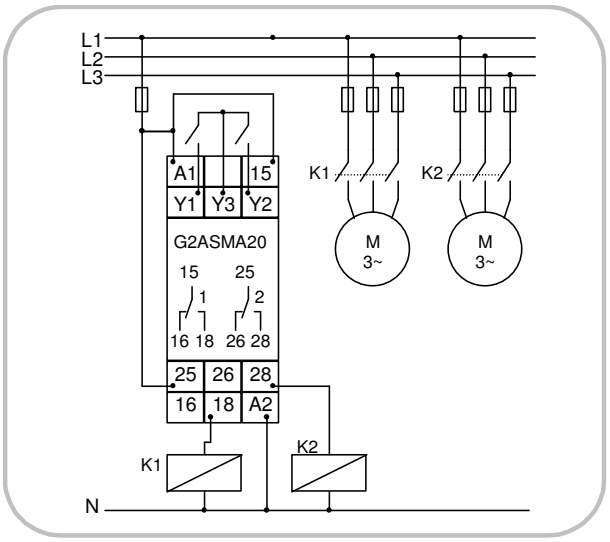

Mode B

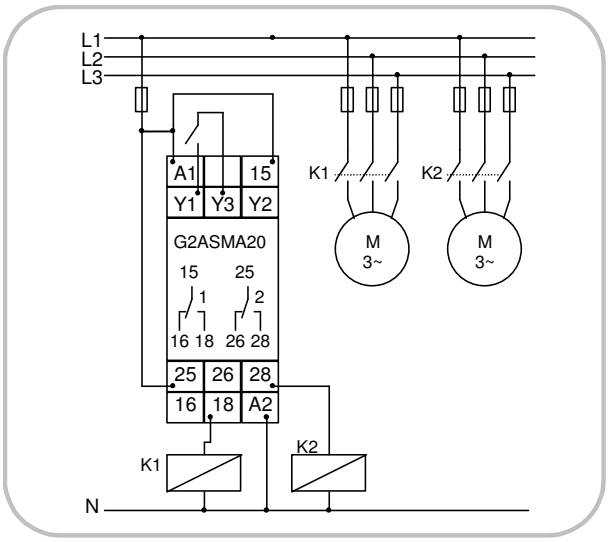

Control by supply voltage

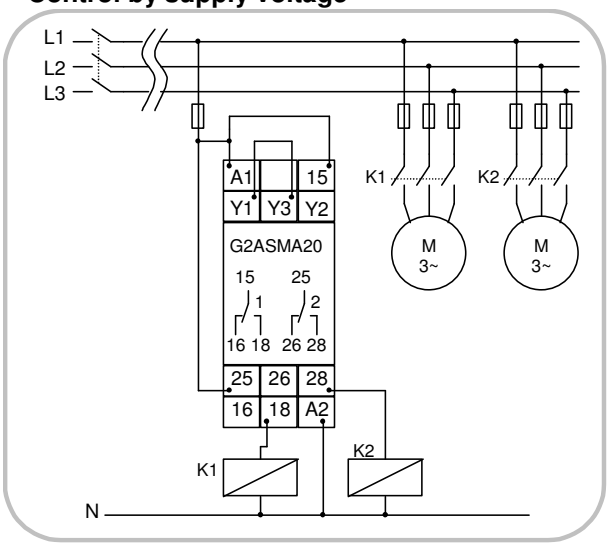

Dimensions

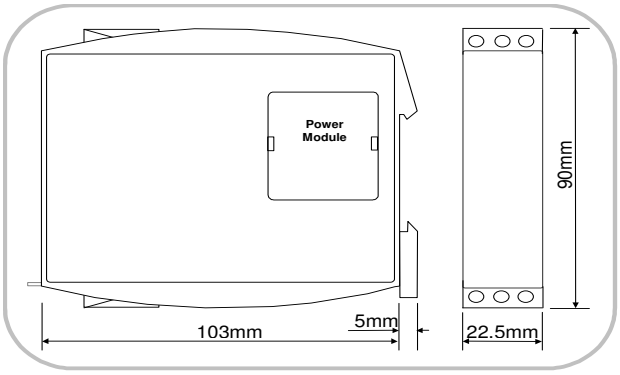

Änderungen und Irrtümer vorbehalten
Subject to alternations and errors