MGT000

Magnetic sensor

MGK2030-AKOA/R/2M

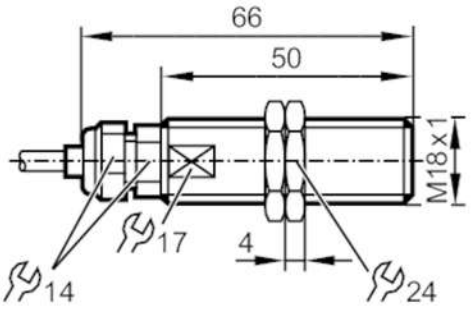

Product characteristics		
Electrical design		PNP/NPN
Output function		normally open
Sensing range	[mm]	25; (referred to magnet M 4.0)
Housing		threaded type
Dimensions	[mm]	M18 x 1 / L = 66
Application		
Special feature		Full-metal housing
Application		high-temperature applications
Electrical data		
Operating voltage	[V]	2...250 AC/DC
Protection class		II
Reverse polarity protection		yes
Outputs		
Electrical design		PNP/NPN
Output function		normally open
Permanent current rating of switching output AC	[mA]	1000
Permanent current rating of switching output DC	[mA]	1000
Short-time current rating of switching output	[mA]	1000
Max. switching power	[W]	100
Short-circuit protection		no
Overload protection		no
Detection zone		
Sensing range	[mm]	25; (referred to magnet M 4.0)
Response sensitivity	[mT]	7.5
Operating conditions		
Ambient temperature	[°C]	-40...180
Protection		IP 65; IP 68; IP 69K

MGT000

Magnetic sensor

MGK2030-AKOA/R/2M

Tests / approvals			
EMC		EN 61000-4-2 ESD	kV CD / 8 kV AD
		EN 61000-4-3 HF radiated	10 V/m
		EN 61000-4-4 Burst	2 kV
		EN 61000-4-5 Surge	1,0 kV line to line, Ri: 2 Ohm
		EN 61000-4-6 HF conducted	10 V
		EN 55011	class B
Shock resistance		EN 60947-5-1	
Vibration resistance		EN 60947-5-1	
MTTF	[years]	57078	

Mechanical data		
Weight	[g]	212
Housing		threaded type
Dimensions	[mm]	M18 x 1 / L = 66
Thread designation		M18 x 1
Materials		housing: stainless steel (1.4404 / 316L); sensing face: stainless steel (1.4404 / 316L); lock nuts: brass
Tightening torque for cable gland	[Nm]	5
Tightening torque	[Nm]	50
Full-metal housing		yes

Electrical connection		
Required protection		miniature fuse to IEC60127-2 sheet 1; ≤ 0,175 A; fast acting

Accessories		
Items supplied		lock nuts: 2

Remarks		
Pack quantity		1 pcs.

Electrical connection

Cable: 2 m, silicone; 2 x 0.75 mm²

Connection

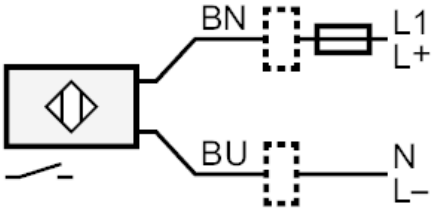

Note miniature fuse to IEC60127-2 sheet 1 ≤ 0.175 A fast acting
Core colours :
BN = brown
BU = blue