JUMO GmbH & Co. KG
Delivery address: Mackenrodtstraße 14
36039 Fulda, Germany
Postal address: 36035 Fulda, Germany
Phone: +49 661 6003-0
Fax: +49 661 6003-607
E-mail: mail@jumo.net
Internet: www.jumo.net

JUMO Instrument Co. Ltd.
JUMO House
Temple Bank, Riverway
Harlow, Essex CM20 2DY, UK
Phone: +44 1279 635533
Fax: +44 1279 635262
E-mail: sales@jumo.co.uk
Internet: www.jumo.co.uk

JUMO Process Control, Inc.
8 Technology Boulevard
Canastota, NY 13032, USA
Phone: 315-697-5866
1-800-554-JUMO
Fax: 315-697-5867
E-mail: info.us@jumo.net
Internet: www.jumousa.com

Screw-in RTD temperature probes with terminal head form B

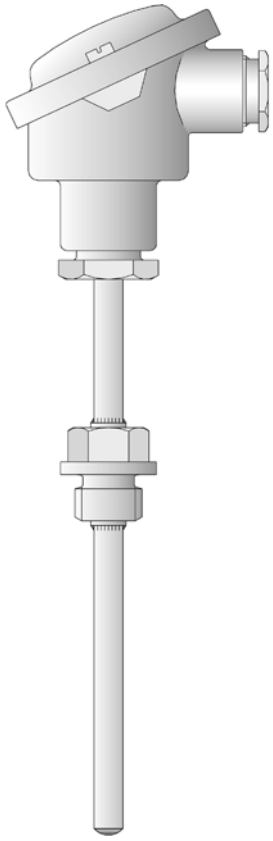

- **For temperatures from -50 to +600 °C**
- **With replaceable measuring insert**
- **As single or double RTD temperature probes**
- **Connection head form B, BUZ, BUZH, BBK**
- **Available with transmitter**

Screw-in RTD temperature probes are mainly used for measuring temperatures in fluids and gasses. A decisive selection criterion is the reliable sealing feature of this installation type with vacuum and with overpressure. The application areas are, among others, in the air conditioning technology and refrigeration engineering as well as the HVAC, kiln and apparatus engineering sector.
The connection head is suitable for temperatures up to +100 °C. The versions BUZ, BUZH and BBK are also available in addition to the standard connection head, form B.
A Pt100 temperature sensing element according to DIN EN 60751, class B in 2-wire circuit is used as a measuring insert by default – versions with Pt500 or Pt1000 are also possible. Connection is available in 3-wire or 4-wire circuit as an option. A transmitter can be optionally integrated into the connection head.

Technical data

Terminal head	Form B DIN 43729, die-cast aluminum, M20 × 1.5; IP65, ambient temperature -40 to +100 °C Form BUZ, die-cast aluminum, M20 × 1.5; IP65, ambient temperature -40 to +100 °C Form BUZH, die-cast aluminum, M20 × 1.5; IP65, ambient temperature -40 to +100 °C Form BBK, plastic, M20 × 1.5; IP54, ambient temperature -30 to +130 °C Caution: reduced ambient temperature range when using transmitters, data sheets 707010, 707030 and 707060
Extension tube	Stainless steel 1.4571, length 130 mm
Process connection	Thread, stainless steel 1.4571 Thermowell, stainless steel 1.4571 or steel 1.7335
Thermowell	Stainless steel 1.4571, Ø 9 mm, Ø 11 mm, Ø 12 mm
Measuring insert	Replaceable, Pt100 temperature probe, DIN EN 60751, class B, 2-wire circuit
Response times	$t_{0.9}$ approx. 50 s, in water 0.2 m/s, Ø 9 mm
Transmitter	analog transmitter, 4 to 20 mA output, data sheet 707030 analog transmitter, 0 to 10 V output, data sheet 707030 programmable transmitter, 4 to 20 mA/20 to 4 mA output, data sheet 707010 Wtrans B programmable head transducer with radio transmission, data sheet 707060 (suitable Wtrans receivers, data sheet 902931)
Accessories	Thermowell, data sheet 909710

JUMO GmbH & Co. KG
Delivery address: Mackenrodtstraße 14
36039 Fulda, Germany
Postal address: 36035 Fulda, Germany
Phone: +49 661 6003-0
Fax: +49 661 6003-607
E-mail: mail@jumo.net
Internet: www.jumo.net

JUMO Instrument Co. Ltd.
JUMO House
Temple Bank, Riverway
Harlow, Essex CM20 2DY, UK
Phone: +44 1279 635533
Fax: +44 1279 635262
E-mail: sales@jumo.co.uk
Internet: www.jumo.co.uk

JUMO Process Control, Inc.
8 Technology Boulevard
Canastota, NY 13032, USA
Phone: 315-697-5866
1-800-554-JUMO
Fax: 315-697-5867
E-mail: info.us@jumo.net
Internet: www.jumousa.com

Dimensions

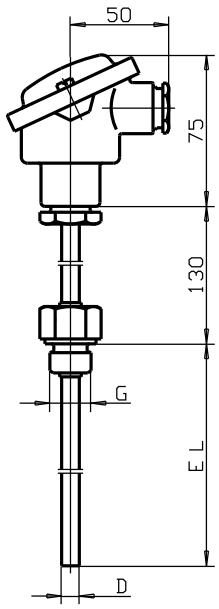

Basic type 902020/10

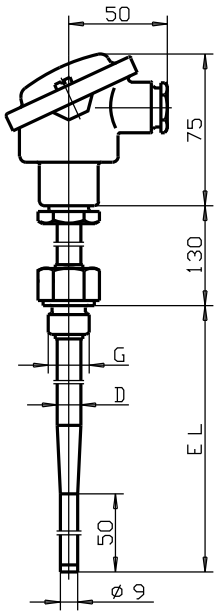

Basic type 902020/11

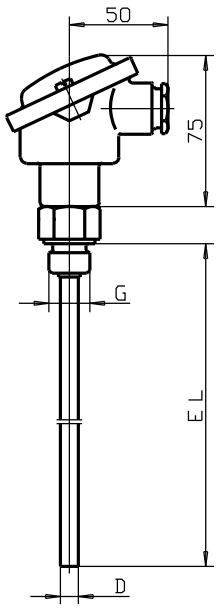

Basic type 902020/20

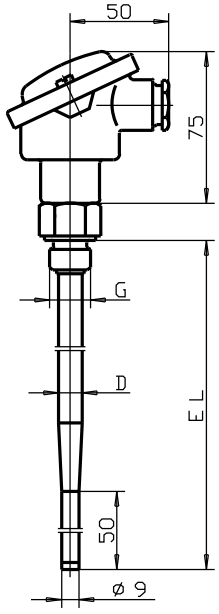

Basic type 902020/21

JUMO GmbH & Co. KG
Delivery address: Mackenrodtstraße 14
36039 Fulda, Germany
Postal address: 36035 Fulda, Germany
Phone: +49 661 6003-0
Fax: +49 661 6003-607
E-mail: mail@jumo.net
Internet: www.jumo.net

JUMO Instrument Co. Ltd.
JUMO House
Temple Bank, Riverway
Harlow, Essex CM20 2DY, UK
Phone: +44 1279 635533
Fax: +44 1279 635262
E-mail: sales@jumo.co.uk
Internet: www.jumo.co.uk

JUMO Process Control, Inc.
8 Technology Boulevard
Canastota, NY 13032, USA
Phone: 315-697-5866
1-800-554-JUMO
Fax: 315-697-5867
E-mail: info.us@jumo.net
Internet: www.jumousa.com

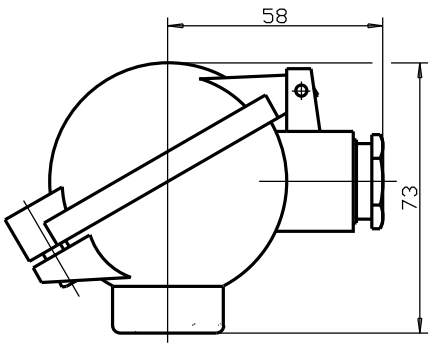

Terminal head Form BUZ
extra code 320

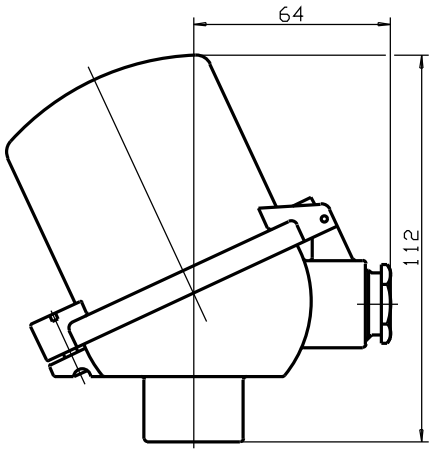

Terminal head Form BUZH
extra code 321

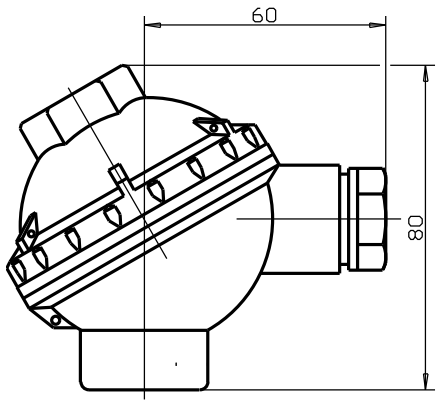

Connection head form BBK
extra code 322

JUMO GmbH & Co. KG
Delivery address: Mackenrodtstraße 14
36039 Fulda, Germany
Postal address: 36035 Fulda, Germany
Phone: +49 661 6003-0
Fax: +49 661 6003-607
E-mail: mail@jumo.net
Internet: www.jumo.net

JUMO Instrument Co. Ltd.
JUMO House
Temple Bank, Riverway
Harlow, Essex CM20 2DY, UK
Phone: +44 1279 635533
Fax: +44 1279 635262
E-mail: sales@jumo.co.uk
Internet: www.jumo.co.uk

JUMO Process Control, Inc.
8 Technology Boulevard
Canastota, NY 13032, USA
Phone: 315-697-5866
1-800-554-JUMO
Fax: 315-697-5867
E-mail: info.us@jumo.net
Internet: www.jumousa.com

Order specifications: Screw-in RTD temperature probe with form B connection head

(1) Basic type

902020/10	Screw-in RTD temperature probes with extension tube and continuous thermowell
902020/11	Screw-in RTD temperature probes with extension tube and stepped thermowell

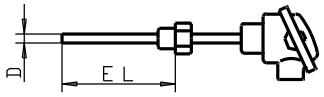

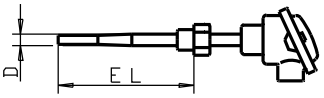

			(2) Operating temperature in °C
x	x	402	-50 to +400 °C (standard)
x	x	415	-50 to +600 °C
			(3) Measuring insert
x	x	1001	1× Pt100 in 3-wire-circuit
x	x	1003	1× Pt100 in 2-wire circuit
x	x	1011	1× Pt100 in 4-wire circuit
x	x	2001	2× Pt100 in 3-wire circuit
x	x	2003	2× Pt100 in 2-wire circuit
			(4) Tolerance class according to DIN EN 60751
x	x	1	Class B (standard)
x	x	2	Class A
			(5) Thermowell diameter D in mm
x		9	Ø 9 mm
x		11	Ø 11 mm
	x	12	Ø 12 mm stepped down to 9 mm
			(6) Fitting length EL in mm (EL 100 ... 1000 mm, EL ≤ 700 mm for basic type 902020/11)
x	x	160	160 mm
	x	220	220 mm
x	x	250	250 mm
	x	280	280 mm
x	x	400	400 mm
x	x	...	Specification in plain text (50 mm steps)
			(7) Process connection
x	x	104	Screw-connection G 1/2
x	x	105	Screw-connection G 3/4
x	x	106	Screw connection G 1
			(8) Extra codes
x	x	000	no extra code
x	x	306	Extension tube 70 mm
x	x	320	terminal head Form BUZ
x	x	321	terminal head Form BUZH
x	x	322	Connection head form BBK
x	x	330	1× analog transmitter, 4 to 20 mA[2] output, data sheet 707030
x	x	331	1× transmitter programmable output 4 to 20 mA/20 to 4 mA[3], data sheet 707010
x	x	333	1× analog transmitter, 0 to 10V[2] output, data sheet 707030
x	x	334	2× analog transmitters, 4 to 20 mA[2] output, data sheet 707030
x	x	335	2× transmitter programmable output 4 to 20 mA/20 to 4 mA[3], data sheet 707010
x	x	337	2× analog transmitters, 0 to 10 V[2] output, data sheet 707030
x	x	859	1× Wtrans B programmable head transducer with radio transmission, data sheet 707060

	(1)		(2)		(3)		(4)		(5)		(6)		(7)		(8)	
Order code		-		-		-		-		-		-		/		,...[1]
Order example	902020/10	-	402	-	1001	-	1	-	11	-	250	-	106	/	000	

[1] List extra codes in sequence, separated by commas.
[2] Specify measuring range in plain text.
[3] Specify measuring range and output signal in plain text.

JUMO GmbH & Co. KG
Delivery address: Mackenrodtstraße 14
36039 Fulda, Germany
Postal address: 36035 Fulda, Germany
Phone: +49 661 6003-0
Fax: +49 661 6003-607
E-mail: mail@jumo.net
Internet: www.jumo.net

JUMO Instrument Co. Ltd.
JUMO House
Temple Bank, Riverway
Harlow, Essex CM20 2DY, UK
Phone: +44 1279 635533
Fax: +44 1279 635262
E-mail: sales@jumo.co.uk
Internet: www.jumo.co.uk

JUMO Process Control, Inc.
8 Technology Boulevard
Canastota, NY 13032, USA
Phone: 315-697-5866
1-800-554-JUMO
Fax: 315-697-5867
E-mail: info.us@jumo.net
Internet: www.jumousa.com

Order specifications: Screw-in RTD temperature probe with connection head form B

(1) **Basic type**

		902020/20	Screw-in RTD temperature probes without extension tube and continuous thermowell
		902020/21	Screw-in RTD temperature probes without extension tube and stepped thermowell

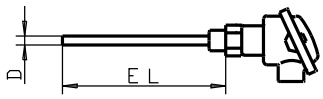

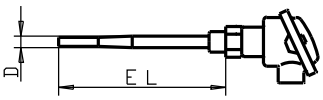

			(2) Operating temperature in °C
x	x	402	-50 to +400 °C (standard)
x	x	415	-50 to +600 °C
			(3) Measuring insert
x	x	1001	1× Pt100 in 3-wire-circuit
x	x	1003	1× Pt100 in 2-wire circuit
x	x	1011	1× Pt100 in 4-wire circuit
x	x	2001	2× Pt100 in 3-wire circuit
x	x	2003	2× Pt100 in 2-wire circuit
			(4) Tolerance class according to DIN EN 60751
x	x	1	Class B (standard)
x	x	2	Class A
			(5) Thermowell diameter D in mm
x		9	Ø 9 mm
x		11	Ø 11 mm
	x	12	Ø 12 mm stepped down to 9 mm
			(6) Fitting length EL in mm (EL 100 ... 1000 mm, EL ≤ 700 mm for basic type 902020/21)
x	x	100	100 mm
x	x	160	160 mm
x	x	250	250 mm
x	x	400	400 mm
x	x	...	Specification in plain text (50 mm steps)
			(7) Process connection
x	x	104	Screw-connection G 1/2
x	x	105	Screw-connection G 3/4
x	x	106	Screw connection G 1
			(8) Extra codes
x	x	000	no extra code
x	x	320	terminal head Form BUZ
x	x	321	terminal head Form BUZH
x	x	322	Connection head form BBK
x	x	330	1× analog transmitter, 4 to 20 mA[2] output, data sheet 707030
x	x	331	1× transmitter programmable output 4 to 20 mA/20 to 4 mA[3], data sheet 707010
x	x	333	1× analog transmitter, 0 to 10 V[2] output, data sheet 707030
x	x	334	2× analog transmitters, 4 to 20 mA[2] output, data sheet 707030
x	x	335	2× transmitter, programmable, output 4 to 20 mA/20 to 4 mA[3], data sheet 707010
x	x	337	2× analog transmitters, 0 to 10 V[2] output, data sheet 707030
x	x	859	1× Wtrans B programmable head transducer with radio transmission, data sheet 707060

	(1)		(2)		(3)		(4)		(5)		(6)		(7)		(8)	
Order code		-		-		-		-		-		-		/		,...[1]
Order example	902020/20	-	402	-	1001	-	1	-	9	-	160	-	104	/	000	

[1] List extra codes in sequence, separated by commas.
[2] Specify measuring range in plain text.
[3] Specify measuring range and output signal in plain text.

JUMO GmbH & Co. KG
Delivery address: Mackenrodtstraße 14
36039 Fulda, Germany
Postal address: 36035 Fulda, Germany
Phone: +49 661 6003-0
Fax: +49 661 6003-607
E-mail: mail@jumo.net
Internet: www.jumo.net

JUMO Instrument Co. Ltd.
JUMO House
Temple Bank, Riverway
Harlow, Essex CM20 2DY, UK
Phone: +44 1279 635533
Fax: +44 1279 635262
E-mail: sales@jumo.co.uk
Internet: www.jumo.co.uk

JUMO Process Control, Inc.
8 Technology Boulevard
Canastota, NY 13032, USA
Phone: 315-697-5866
1-800-554-JUMO
Fax: 315-697-5867
E-mail: info.us@jumo.net
Internet: www.jumousa.com

Stock versions

(1)		(2)		(3)		(4)		(5)		(6)		(7)		(8)	Part no.
902020/10	-	402	-	1003	-	1	-	9	-	160	-	104	/	000	00055562
902020/10	-	402	-	1003	-	1	-	9	-	250	-	104	/	000	00055563
902020/10	-	402	-	1003	-	1	-	9	-	400	-	104	/	000	00055564
902020/10	-	402	-	2003	-	1	-	9	-	160	-	104	/	000	00055565
902020/10	-	402	-	2003	-	1	-	9	-	250	-	104	/	000	00055566
902020/10	-	402	-	2003	-	1	-	9	-	400	-	104	/	000	00055567
902020/10	-	402	-	1001	-	1	-	9	-	160	-	104	/	330 (0 to 100 °C)	00054616
902020/10	-	402	-	1001	-	1	-	9	-	160	-	104	/	330 (0 to 200 °C)	00087522
902020/10	-	402	-	1001	-	1	-	9	-	250	-	104	/	330 (0 to 100 °C)	00054617
902020/10	-	402	-	1001	-	1	-	9	-	250	-	104	/	330 (0 to 200 °C)	00087527
902020/10	-	402	-	1001	-	1	-	9	-	400	-	104	/	331 (0 to 100 °C)	00335111

Accessories for programmable 2-wire transmitter type 707010 in the accessories data sheet 709770

Part	Part no.
PC interface with TTL/RS232 converter and adapter (socket connector)	00350260
PC interface with USB/TTL converter, adapter (socket connector) and adapter (pins)	00456352
Special programming (standard measuring range 0 to 100 °C)	-
Setup program on CD-ROM, multilingual	00378733

Accessories for Wtrans B, programmable head transmitter with radio transmission Type 707060

Part	Part no.
Lithium battery 3.6 V, 2.2 Ah (size AA)	00547559
PC interface with USB/TTL converter, adapter (socket) and adapter (pins)	00456352
PC interface with TTL/RS232 converter and adapter (socket connector)	00350260
Setup program on CD-ROM, multilingual	00488887
Setup program including OnlineChart on CD-ROM, multilingual	00549067
OnlineChart activation	00549188