Brand of NTN Group

Technical data

US211G2

Insert bearings



Spherical outer diameter, fixing by socket set screw, single lip seal

VISUAL (S)

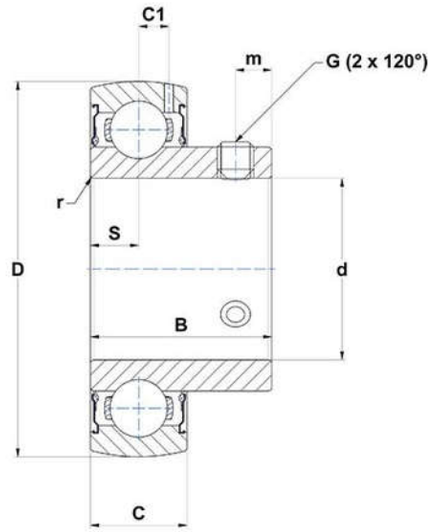

PRODUCT DEFINITION

Brand	SNR
B - Width of Inner Ring	45,3 mm
C - Width of Outer Ring	23 mm
C1 - Distance center of OR to center of lubrication zone	7,2 mm
d - Shaft diameter	55 mm
D - Outer diameter of OR	100 mm
G - Set screw size	M10x1,25
m - Distance to set screw	9,8 mm

NTN Europe
1 rue des Usines · BP 2017 · 74010 Annecy Cedex · France · Tel. +33 (0)4 50 65 30 00
S.A. au capital de 322 639 919 € · RCS ANNECY B 325 821 072 · Id. Fiscale : FR 48 325 821 072
SIRET 325 821 072 00015 · Code APE 2815 Z · Code NACE 28.15

US211G2
Insert bearings

PRODUCT DEFINITION	
r - Radius Inner Ring	1.1
S - Distance front side/bearing centre	11,8 mm
f0 - Factor	14.4
SW - Wrench size	5 mm

PRODUCT PERFORMANCE	
C - Dynamic load rating	43550000 mN
C0 - Static load rating	29200000 mN
Operating temperature min.	253,15 °K
Operating temperature max.	373,15 °K

OTHER FEATURES	
Mass	1,07 kg
Recommended tightening torque for set screw	22 N-m

BEARING FREQUENCIES	
BPFO - Over rolling frequency on outer ring (60 rpm)	4.0781935483871 Hz
BPFI - Over rolling frequency on inner (60 rpm)	5.9218064516129 Hz
BSF - Over rolling frequency on rolling element (60 rpm)	5.2397708485352 Hz
BRF - Rotational frequency – rolling element (60 rpm)	2.6198854242676 Hz
FTF - Rotational frequency - cage (60 rpm)	0.40781935483871 Hz