EN

Professionally approved products.

Gate Valves

150S-300WOG Globe Valves Screwed Ends



RS Stock No. 510-3801

Design features:

1.150 PSI saturated steam to 366°F or 185°C
150 PSI fluid to 406°F or 207°C
300 PSI non-shock cold water , oil or gas

2. Female threaded ends complying with ansi/asme b1.20.1

Resistant

NSF61 APPROVED

Professionally approved products.

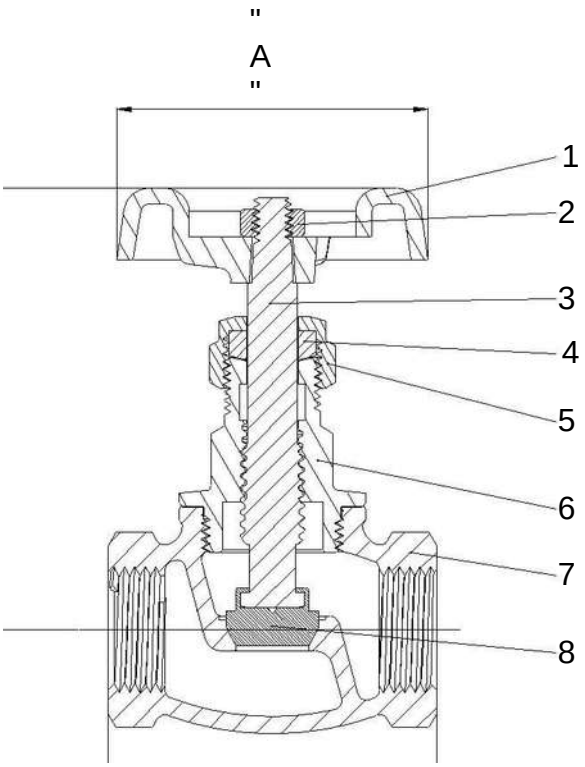

Size		A	B-OPEN	B-CLOSE	L
½"	in	2.13	3.46	2.99	2.24
	mm	54	88	76	57
¾"	in	2.36	3.62	3.15	2.56
	mm	60	92	80	65
1"	in	2.48	4.25	3.74	3.07
	mm	63	108	95	78
1¼"	in	2.83	5.04	4.45	3.50
	mm	72	128	113	89
1½"	in	3.27	5.73	5.01	3.94
	mm	83	145.6	127.3	100
2"	in	3.66	6.36	5.56	4.76
	mm	93	161.5	141.2	121

MATERIAL LIST

NO	NOMENCLATUR	BRONZE	LEAD FREE
1.	HANDWHEEL	CAST IRON	CAST IRON
2.	HANDLE NUT	BRASS C3604	BRASS C3604
3.	STEM	ASTM B16 C36000	ASTM C69300 or C89833
4.	PACKING	TEFLON	TEFLON
5.	PACKING NUT	ASTM B16 C36000	ASTM C69300 or C89833
6.	BONNET	ASTM B124 C37700	ASTM C69300 or C89833
7.	BODY	ASTM B584 C83600	ASTM C89833
8.	RING	ASTM B16 C36000	ASTM C69300 or C89833
9.	HOLDER	ASTM B16 C36000	ASTM C69300 or C89833