20817-860 PLUG-IN UNIT KIT WITH EXTRACTION HANDLE TYPE 2, UNSHIELDED, GREY, 3 U, 4 HP





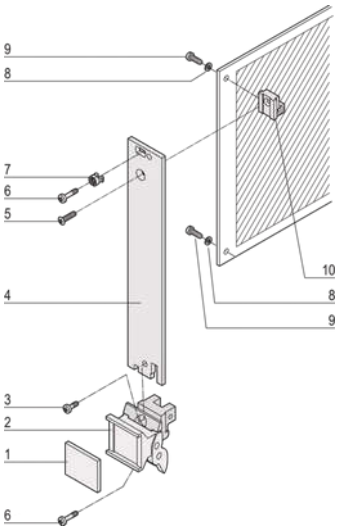

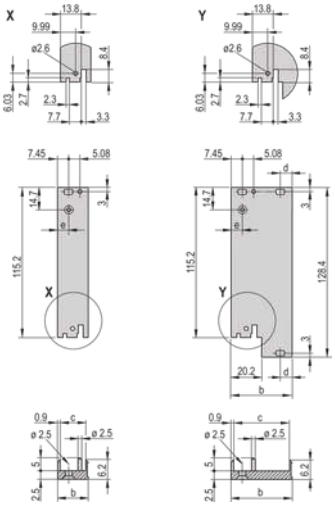

KEY FEATURES

Front panel, flat, unshielded

Handle with extraction function

PRODUCT ATTRIBUTES

Product Type: Front Panel

Type: Front Panel with Handle (PIU)

Handle Type: Trapezoid, Type 2

Mounting: Screw-on Front

EMC Shielding: No

Material: Aluminum

Front Finish: Anodized

Rear Finish: Passivated

Treated Edges: No

Rack Height: 3 U

Height: 128.4 mm

Rack Width: 4 HP

Width: 20 mm

Complies With: EN 45545-2, R22-R24, HL3; IEC 60297-3-101; IEEE 1101.1/11

Flammability Rating: UL® 94V-0

Package Quantity: 1

ADDITIONAL PRODUCT DETAILS

Plug-in unit, with extraction handle type 2 and flat front panel. The grey handle is assembled on the front panel. The handle type 2 is preassembled.

CERTIFICATIONS

RoHS COMPLIANT

North America
All locations
+1.763.422.2661
Chat with us:
schroff.nvent.com

Europe
Straubenhardt, Germany
+49.7082.794.0
Betschdorf, France
+33.3.88.90.64.90
Warsaw, Poland
+48.22.209.98.35
Assago, Italy
+39.02.932.7141
Chat with us:
schroff.nvent.com

Asia
Shanghai, China
+86.21.2412.6943
Qingdao, China
+86.532.8771.6101
Singapore
+65.6768.5800
Shin-Yokohama, Japan
+81.45.476.0271
Chat with us:
schroff.nvent.com

Middle East & India
Dubai, United Arab Emirates
+971.4.378.1700
Bangalore, India
+91.80.6715.2001
Istanbul, Turkey
+90.216.250.7374
Chat with us:
schroff.nvent.com

nVent

Our powerful portfolio of brands:
nVent.com **CADDY ERICO HOFFMAN RAYCHEM SCHROFF TRACER**

© 2024 nVent. All nVent marks and logos are owned or licensed by nVent Services GmbH or its affiliates. All other trademarks are the property of their respective owners.

nVent reserves the right to change specifications without notice.