PA3022

Pressure transmitter with ceramic measuring cell

PA-100-SBR14-A-ZVG/US/ /V

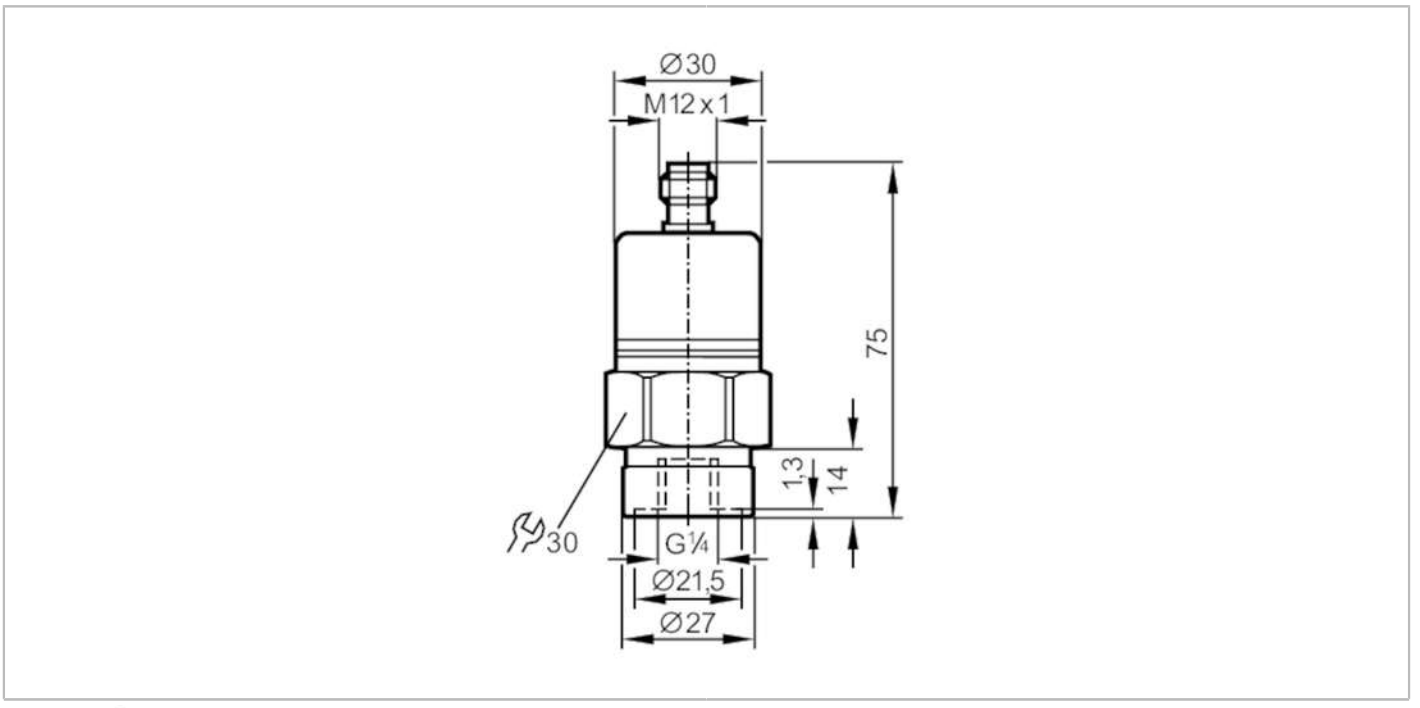

Product characteristics			
Number of inputs and outputs	Number of analogue outputs: 1		
Measuring range	0...100 bar	0...1450 psi	0...10 MPa
Process connection	threaded connection G 1/4 internal thread		
Application			
Special feature	Gold-plated contacts		
Application	for industrial applications		
Media	liquids and gases		
Conditionally suitable for	use in gases at pressures > 25 bar only on request		
Medium temperature [°C]	-25...90; (on request: -40...90 °C)		
Min. bursting pressure	650 bar	9425 psi	65 MPa
Pressure rating	300 bar	4350 psi	30 MPa
Type of pressure	relative pressure		
Electrical data			
Operating voltage [V]	9.6...32 DC		
Min. insulation resistance [MΩ]	100; (500 V DC)		
Protection class	III		
Reverse polarity protection	yes		
Inputs / outputs			
Number of inputs and outputs	Number of analogue outputs: 1		
Outputs			
Total number of outputs	1		
Output signal	analogue signal		
Number of analogue outputs	1		

PA3022

Pressure transmitter with ceramic measuring cell

PA-100-SBR14-A-ZVG/US/ /V

Analogue current output [mA]	4...20		
Max. load [Ω]	720; (Ub = 24 V; (Ub - 9,6 V) / 20 mA)		
Overload protection	yes		
Measuring/setting range			
Measuring range	0...100 bar	0...1450 psi	0...10 MPa
Accuracy / deviations			
Repeatability [% of the span]	< 0,1; (with temperature fluctuations < 10 K)		
Characteristics deviation [% of the span]	< ± 0,25 (BFSL) / < ± 0,5 (LS); (BFSL = Best Fit Straight Line; LS = limit value setting)		
Long-term stability [% of the span]	< ± 0,05; (per 6 months)		
Temperature coefficient zero point [% of the span / 10 K]	0,1; (0...80 °C)		
Temperature coefficient span [% of the span / 10 K]	0,2; (0...80 °C)		
Response times			
Step response time analogue output [ms]	3		
Operating conditions			
Ambient temperature [°C]	-25...80		
Storage temperature [°C]	-40...100		
Protection	IP 68; IP 69K		
Tests / approvals			
EMC	EN 61000-4-2 ESD	4 kV CD / 8 kV AD	
	EN 61000-4-3 HF radiated	30 V/m	
	EN 61000-4-4 Burst	2 kV	
	EN 61000-4-6 HF conducted	10 V	
	radiation of interference	according to the automotive directive 2004/104/EC	
	CISPR 25		
	immunity	according to the automotive directive 2004/104/EC	
	ISO 11452-2 HF radiated	100 V/m	
	ISO 7637-2 pulse	severity level 4	
Shock resistance	DIN EN 60068-2-27	50 g (11 ms)	
	DIN EN 61373	category 3	
Vibration resistance	DIN EN 60068-2-6	20 g (10...2000 Hz)	
	DIN EN 61373	category 2	
MTTF [years]	507		
Pressure Equipment Directive	Sound engineering practice; can be used for group 2 fluids; group 1 fluids on request		
Railway applications	DIN EN 50155 / IEC 60571	Klasse T3, C1, S1	
Mechanical data			
Weight [g]	222		
Housing	cylindrical		
Dimensions [mm]	Ø 30 / L = 75		
Materials	stainless steel (316L/1.4404); FKM; PA; EPDM/X		

PA3022

Pressure transmitter with ceramic measuring cell

PA-100-SBR14-A-ZVG/US/ /V

Materials (wetted parts)	stainless steel (303/1.4305); ceramics; FKM
Min. pressure cycles	100 million
Process connection	threaded connection G 1/4 internal thread
Restrictor element integrated	no (can be retrofitted)

Remarks

Pack quantity	1 pcs.

Electrical connection

Connector: 1 x M12; coding: A; Contacts: gold-plated



Connection

