MURR ELEKTRONIK
stay connected

M8 female 0° with cable

PUR 8x0.14 5m

Female straight
M8, 8-pole
without cable sleeves
Plastic housings with good resistance against chemicals and oils.
The resistance to aggressive media should be individually tested for your application. Further details on request.
Further cable lengths on request.

Link to Product

Illustration





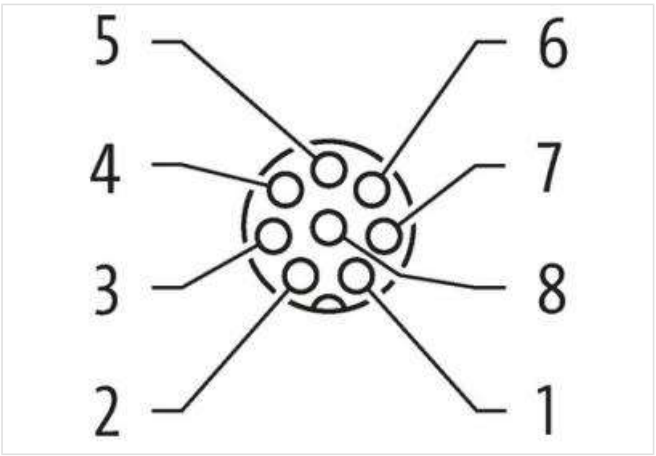

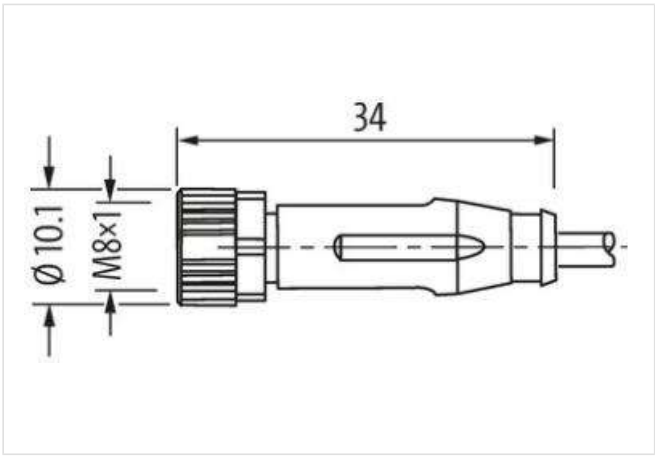

Product may differ from Image

c UL us LISTED CYJV Cable Assembly 47YV E325311

Cable length	5 m

Side 1

Tightening torque	0,4 Nm

The information in this Product-PDF has been compiled with the utmost care.
Liability for the correctness completeness and topicality of the information is restricted to gross negligence. Version: 2024-01-31

Mounting method	inserted, screwed
Family construction form	M8
Thread	M8 x 1
suitable for corrugated tube (internal Ø)	8 mm
Coding	A
Material	PUR
Width across flats	SW9
Degree of protection (EN IEC 60529)	IP67
Commercial data	
ECLASS-6.0	27279218
ECLASS-7.0	27279218
ECLASS-8.0	27279218
ECLASS-9.0	27060311
ECLASS-10.1	27060311
ECLASS-11.1	27060311
ECLASS-12.0	27060311
ETIM-5.0	EC001855
customs tariff number	85444290
GTIN	4048879550123
Packaging unit	1
Electrical data | Supply	
Operating voltage AC max.	30 V
Operating voltage DC max.	30 V
Current operating per contact max.	1,5 A
Installation | Connection	
Mounting set	M8 x 1
Device protection | Electrical	
Additional condition protection degree	inserted, screwed
Pollution Degree	3
Mechanical data | Material data	
Coating locking	Nickeled
Coating of fitting	nickel plated
Material gasket	NBR
Locking material	Zinc die-casting
Material screw connection	Zinc die-casting
Mechanical data | Mounting data	
Mounting method	inserted, screwed, Shaking protection
Environmental characteristics | Climatic	
Operating temperature min.	-30 °C
Operating temperature max.	80 °C
Additional condition temperature range	depending on cable quality
Cable	
Cable identification	696
Material wire	Cu wire, bare
Resistor (core)	max. 78 Ω/km (20 °C)
Single wire Ø (core)	0.1 mm
Construction (core)	18× 0.1 mm (multi-strand wire class 6)
Diameter (core)	8× 0.14 mm²
AWG	similar to AWG 14
Material wire isolation	PP

The information in this Product-PDF has been compiled with the utmost care.
Liability for the correctness completeness and topicality of the information is restricted to gross negligence. Version: 2024-01-31

Wire-Ø incl. isolation	1.07 mm ±5%
Stranding combination	8 wires twisted around central filler
Shield	no
Material jacket	PUR
Outer-Ø (jacket)	5.5 mm ±5%
Color jacket	black
Jacket Color	black
Nominal voltage	300 V
Test voltage	3000 V AC
Temperature range (fixed)	-30...+80 °C
Temperature range (mobile)	-15...+80 °C
Bend radius (fixed)	6× outer Ø
No. of bending cycles (C-track)	max. 2 Mio. (25 °C)
Travel speed (C-track)	max. 5 m/s
Acceleration (C-track)	max. 10 m/s²

The information in this Product-PDF has been compiled with the utmost care.
Liability for the correctness completeness and topicality of the information is restricted to gross negligence. Version: 2024-01-31