Brand of NTN corporation

Technical data

UCP322

Bearing units



Grey cast housing, radial insert ball bearing with socket set screws,seal with slinger

KIT CONTENT

UC322G2, P322

VISUAL (S)

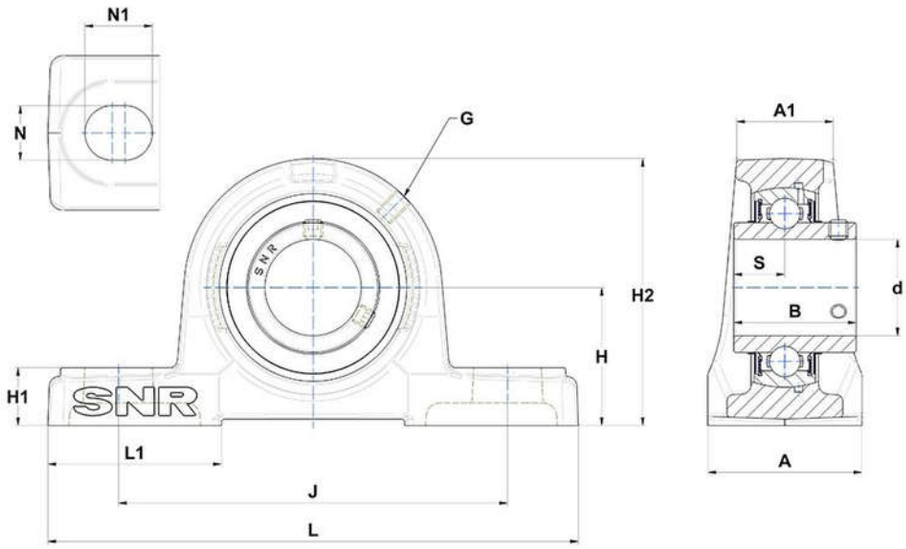

PRODUCT DEFINITION

Brand	SNR
A - Housing width	140 mm
A1 - Housing top width	83 mm
B - Width of Inner Ring	117 mm
d - Shaft diameter	110 mm
G - Grease fitting	M10x1

PRODUCT DEFINITION	
H - Distance mounting base to centerline spheric. seating diam.	150 mm
H1 - Housing foot height	55 mm
H2 - Housing height	300 mm
J - Mounting holes distance	400 mm
L - Housing length	520 mm
L1 - Housing foot length	135 mm
N - Mounting hole dimension	40 mm
N1 - Mounting hole length	55 mm
S - Distance front side/bearing centre	46 mm

PRODUCT PERFORMANCE	
C - Dynamic load rating	205000000 mN
C0 - Static load rating	178000000 mN
Operating temperature min.	253,15 °K
Operating temperature max.	373,15 °K

OTHER FEATURES	
Mass	47,7 kg
Recommended tightening torque for set screw	75 N-m