DATASHEET - M22-RJ45-SA



Bulkhead interface, RJ45 socket, 8/8, cat. 5e, Bezel: titanium

Part no.	**M22-RJ45-SA**
Catalog No.	**107413**
Alternate Catalog No.	**M22-RJ45-SAQ**
EL-Nummer (Norway)	**0004355601**

Powering Business Worldwide™

Delivery program

Accessories			General accessories
Basic function accessories			Bulkhead interface, RJ45 socket
			RJ45 socket, 8/8, cat. 5e
Degree of Protection			IP65 (with closed cover) IP20 (with plug connected)
Front ring			Bezel: titanium
Connection to SmartWire-DT			no
For use with			Front mounting
Terminal diagram / contact assignment			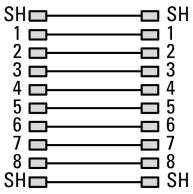

Technical data

Technical data

Nominal voltage	U_L		AC 24 V
Voltage range			AC 50 V
Rated current		mA	1500
Number of poles			8 pole
Class / category			5
Contact type art			1 : 1
Screen earth kit			yes

General

Design			RJ45
Insulation resistance	R_{ISO}	MΩ	> ≧ 100
Volume resistance			< 30 mΩ
Contact material			CuSn, gold-plated
Mounting			Front panel cutout d = 22.5 mm
Mounting depth:		mm	ca. 70 (incl. Krümmung)
Ambient temperature			-25 - +70
Storage		°C	- 25 - + 80
Lifespan, mechanical	Operations		< 750 insertion cycles
Weight		kg/piece	0.02

Design verification as per IEC/EN 61439

Technical data for design verification			
Heat dissipation capacity	P_{diss}	W	0
Operating ambient temperature min.		°C	-25
Operating ambient temperature max.		°C	70

IEC/EN 61439 design verification	
10.2 Strength of materials and parts	
10.2.2 Corrosion resistance	Meets the product standard's requirements.
10.2.3.1 Verification of thermal stability of enclosures	Meets the product standard's requirements.
10.2.3.2 Verification of resistance of insulating materials to normal heat	Meets the product standard's requirements.
10.2.3.3 Verification of resistance of insulating materials to abnormal heat and fire due to internal electric effects	Meets the product standard's requirements.
10.2.4 Resistance to ultra-violet (UV) radiation	Please enquire
10.2.5 Lifting	Does not apply, since the entire switchgear needs to be evaluated.
10.2.6 Mechanical impact	Does not apply, since the entire switchgear needs to be evaluated.
10.2.7 Inscriptions	Meets the product standard's requirements.
10.3 Degree of protection of ASSEMBLIES	Does not apply, since the entire switchgear needs to be evaluated.
10.4 Clearances and creepage distances	Meets the product standard's requirements.
10.5 Protection against electric shock	Does not apply, since the entire switchgear needs to be evaluated.
10.6 Incorporation of switching devices and components	Does not apply, since the entire switchgear needs to be evaluated.
10.7 Internal electrical circuits and connections	Is the panel builder's responsibility.
10.8 Connections for external conductors	Is the panel builder's responsibility.
10.9 Insulation properties	
10.9.2 Power-frequency electric strength	Is the panel builder's responsibility.
10.9.3 Impulse withstand voltage	Is the panel builder's responsibility.
10.9.4 Testing of enclosures made of insulating material	Is the panel builder's responsibility.
10.10 Temperature rise	The panel builder is responsible for the temperature rise calculation. Eaton will provide heat dissipation data for the devices.
10.11 Short-circuit rating	Is the panel builder's responsibility. The specifications for the switchgear must be observed.
10.12 Electromagnetic compatibility	Is the panel builder's responsibility. The specifications for the switchgear must be observed.
10.13 Mechanical function	The device meets the requirements, provided the information in the instruction leaflet (IL) is observed.

Technical data ETIM 7.0

Low-voltage industrial components (EG000017) / Accessories for control circuit devices (EC002024)	
Type of electrical accessory	Other
Type of mechanical accessory	Other

Approvals

Product Standards	UL 508; CSA-C22.2 No. 142; IEC/EN 6113-2; CE marking
UL File No.	E330994
UL Category Control No.	DUXR, DUXR7
CSA File No.	UL report applies to both US and Canada
CSA Class No.	-
North America Certification	UL listed, certified by UL for use in Canada
Degree of Protection	IEC: IP65 and UL/CSA NEMA Type 2, 3R, 4, 4X, 12, 13 when closed, IP20 when connected

Characteristics

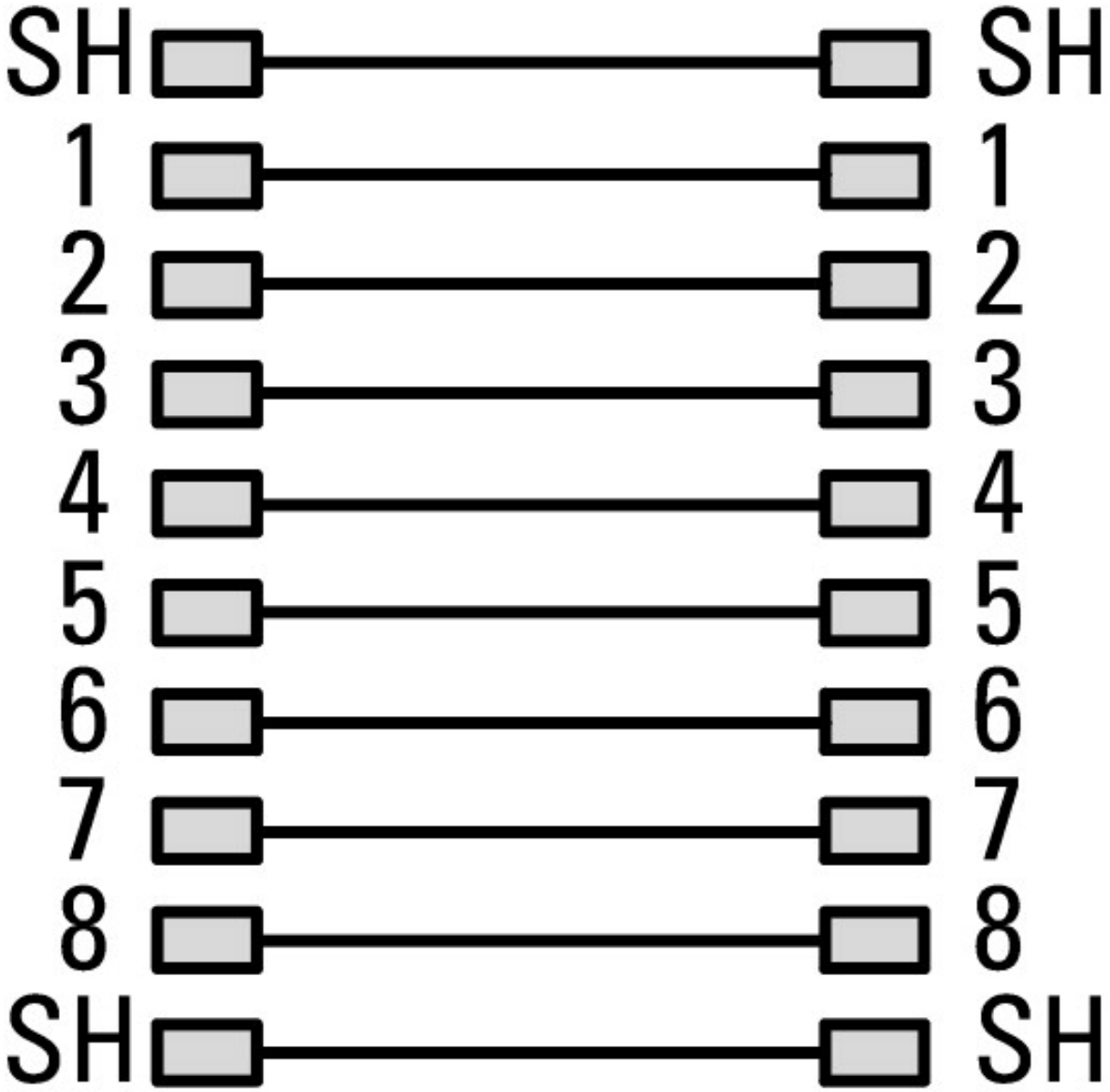

SH: Schirmung

Dimensions

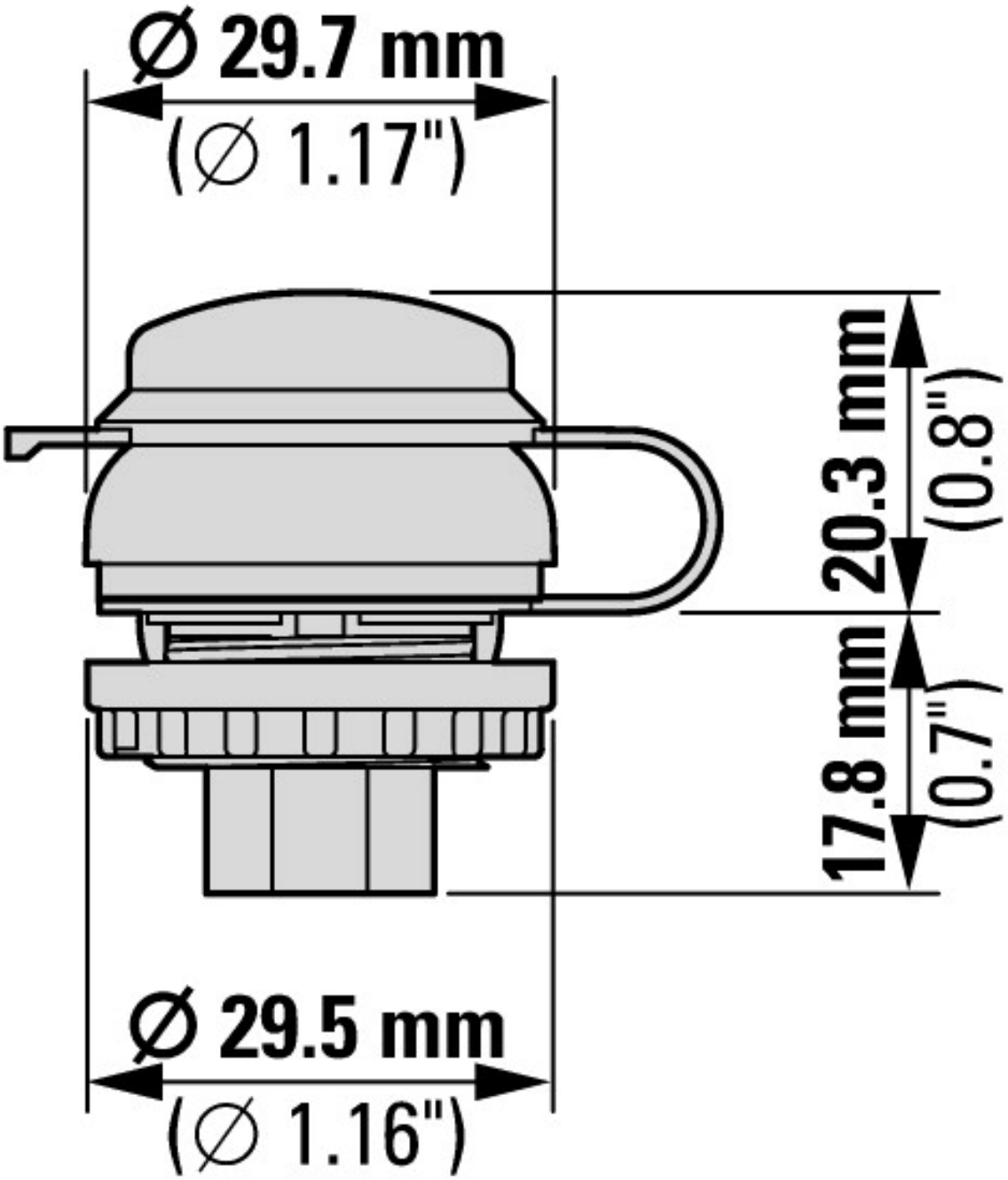

Additional product information (links)

IL04716002Z (AWA1160-1745) RMQ-Titan System	
IL04716002Z (AWA1160-1745) RMQ-Titan System	ftp://ftp.moeller.net/DOCUMENTATION/AWA_INSTRUCTIONS/IL04716002Z2018_10.pdf

© 06/2020 by Eaton Industries GmbH