Plastic Protecting Ring
For Inductive Encoders Ri-EQR24
M5-QR24

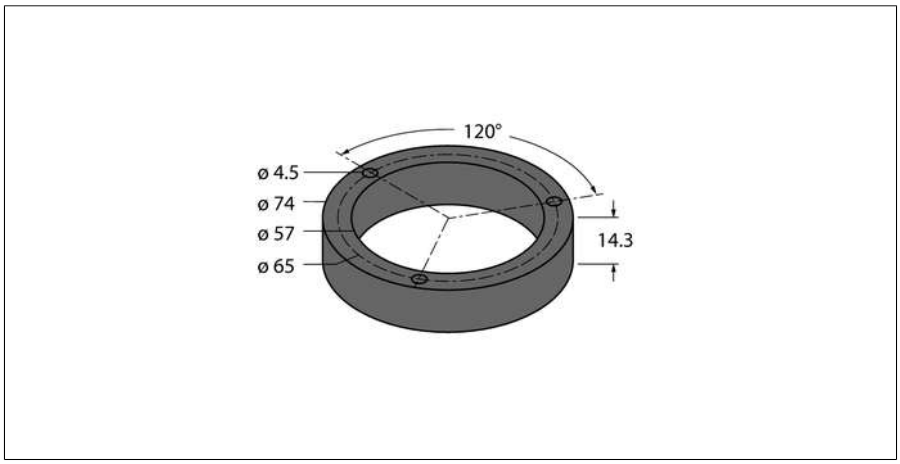

- **Outer diameter: 74 mm**
- **Material: Plastic (PA 6 (polyamide 6)**

Type designation	M5-QR24
Ident no.	1590965
Housing material	Plastic
Packaging unit	1

Edition • 2018-05-20T14:47:57+02:00

Hans Turck GmbH & Co.KG ● D-45472 Mülheim an der Ruhr ● Witzlebenstraße 7 ● Tel. 0208 4952-0 ● Fax 0208 4952-264 ● more@turck.com ● www.turck.com