sferaco
VALVES & FITTINGS

REF. 696

BIBCOCK BALL VALVE PN16





Size :	DN 1/2" to 1"
Ends :	Male, hose coupling
Min Temperature :	+ 0°C
Max Temperature :	+ 60°C
Max Pressure :	16 Bars
Specifications :	With hose coupling With manifold Flat steel handle or butterfly handle
Materials :	Brass

Sferaco 90 rue du Ruisseau 38297 St Quentin Fallavier Tel: + 33 (0) 474.94.15.90 Fax: + 33 (0) 474.95.62.08 Internet: www.sferaco.fr E-mail : sferaco@sferaco.fr

Information provided as an indication and subject to possible modification

BIBCOCK BALL VALVE PN16

SPECIFICATIONS :

- With hose coupling
- With manifold
- Solid ball
- PTFE packing
- Flat steel handle or aluminium butterfly handle

USE :

- Water distribution
- Min Temperature Ts : + 0°C
- Max Temperature Ts :+ 60°C
- Max Pressure Ps : 16 Bars

RANGE :

- Male BSP with hose coupling and red flat steel handle **Ref. 6960** from DN 1/2" to 1"
- Male BSP with hose coupling and red aluminium butterfly handle **Ref. 6961** from DN 1/2" to 3/4"

BIBCOCK BALL VALVE PN16

MATERIALS :

REF. 6960 REF. 6961

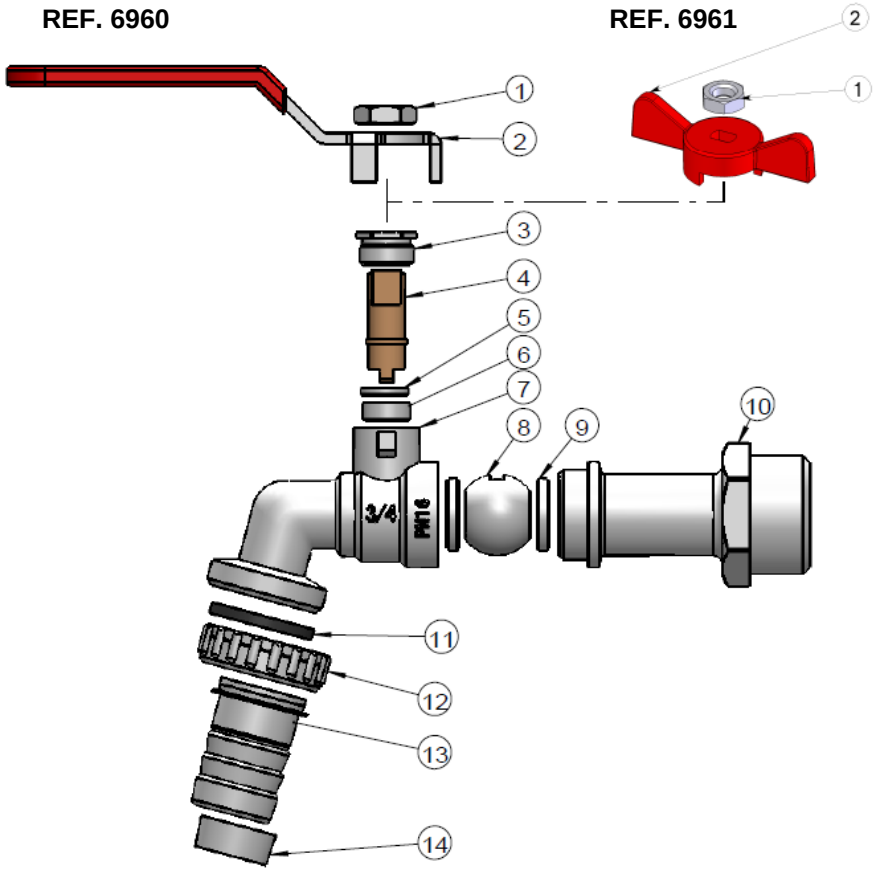

Item	Designation	Materials Ref.6960	Materials Ref.6961
1	Handle nut	Steel Q235	Steel Q235
2	Handle	Steel Q235	Aluminium
3	Packing nut	Brass	Brass
4	Stem	Brass	Brass
5	Ring	Brass	Brass
6	Packing	PTFE	PTFE
7	Body	Brass	Brass
8	Ball	Brass	Brass
9	Seat	PTFE	PTFE
10	Bonnet	Brass	Brass
11	Gasket	NBR	NBR
12	Nut	Brass	Brass
13	Hose coupling	Brass	Brass
14	Manifold	PE	PE

Information provided as an indication and subject to possible modification

BIBCOCK BALL VALVE PN16

SIZE (in mm) :

REF. 6961

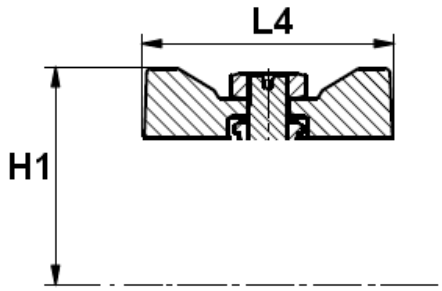

REF. 6960

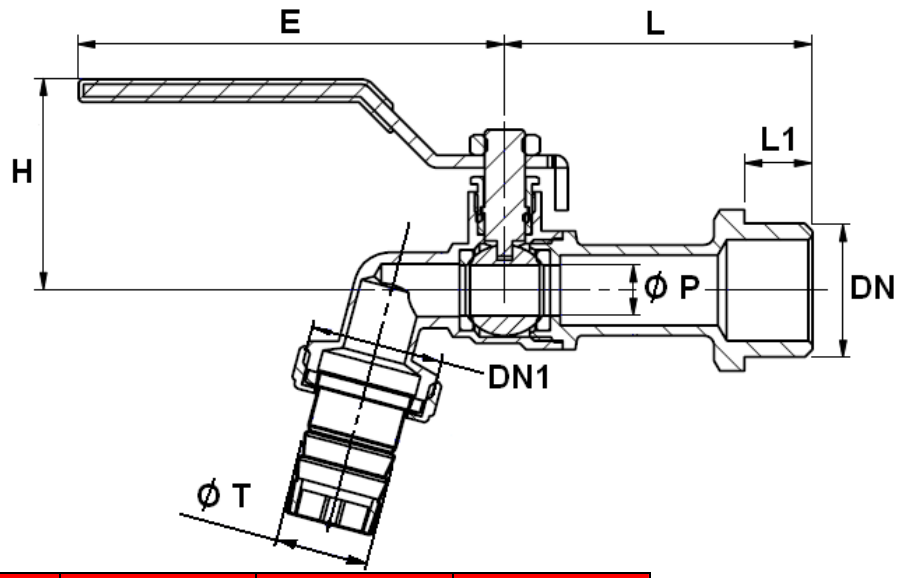

Ref.	DN	1/2"	3/4"	3/4“
6960 + 6961	DN1	3/4“	3/4“	1“
	Ø T	19	19	20.5
	Ø P	10	10	12
	L	55	61	66.5
6960	E	84.5	84.5	84.5
	H	41.8	41.8	42.6
6961	H1	35	35	-
	L4	53	53	-
6960 + 6961	Weight (Kg)	0.175	0.204	0.278

STANDARDS :

- Fabrication according to ISO 9001 : 2008
- DIRECTIVE 97/23/CE : Products excluded from directive (Article 1, § 3.2)
- French water agreement **A.C.S. N° 14 ACC LY 660**
- Threaded Male BSP cylindrical ends according to ISO 228-1

ADVICE : Our opinion and our advice are not guaranteed and SFERACO shall not be liable for the consequences of damages.
The customer must check the right choice of the products with the real service conditions.

sferaco
VALVES & FITTINGS

REF. 696

BIBCOCK BALL VALVE PN16

INSTALLATION INSTRUCTIONS

GENERAL GUIDELINES :

- Ensure that the valves to be used are appropriate for the conditions of the installation (type of fluid,pressure and temperature).
- Be sure to have enough valves to be able to isolate the sections of piping as well as the appropriate equipment for maintenance and repair.
- Ensure that the valves to be installed are of correct strenght to be able to support the capacity of their usage.
- **Installation of all circuits should ensure that their function can be automatically tested on a regular basis (at least two times a year).**

INSTALLATION INSTRUCTIONS :

- **Before installing the valves,clean and remove any objects from the pipes** (in particular bits of sealing and metal) which could obstruct and block the valves.

- **Ensure that both connecting pipes either side of the valve (upstream and downstream) are aligned (if they're not,the valves may not work correctly).**

- **Make sure that the two sections of the pipe (upstream and downstream) match,the valve unit will not absorb any gaps.Any distortions in the pipes may affect the thightness of the connection,the working of the valve and can even cause a rupture.**To be sure,place the kit in position to ensure the assembling will work.

- Before starting the fitting,ensure that the threads and tapping are clean.

- **If sections of piping do not have their final support in place,they should be temporarily fixed.This is to avoid unnecessary strain on the valve.**

- The theoretical lenghts given by ISO/R7 for the tapping are typically longer than required,the lenght of the thread should be limited, and **check that the end of the tube does not press right up to the head of the thread.**

- For the sealing assembly valve piping, it is essential to use products that are compatible with the requirements of the French water agreement ACS : **plumbers hemp proscribed**.
- Position the pipe clips on both sides of the valve.
- If mounting on an air conditioning with PER tubing and hoses,it is necessary to support the tubes and hoses with the fixing to avoid strain on the valve.
- When screwing the valve,ensure that you only rotate on screwed side by the 6 ended side.Use an open ended spanner or an adjustable spanner and not a monkey wrench.
- **Never use a vice to tighten the fixings of the valve.**
- Do not over tighten the valve.Do not block with any extensions as it may cause a rupture or weakening of the casing**.**

- **In general,for all valves used in buildings and heating,do not tighten above a torque of 30 Nm.**

The advice and assembly instructions above do not conform to any guarantee.
The information is given in general.It states what must not and must be done.
It is provided to ensure the safety of the personnel and the reliability of the valves.
The instructions in bold must be followed.

Sferaco 90 rue du Ruisseau 38297 St Quentin Fallavier Tel: + 33 (0) 474.94.15.90 Fax: + 33 (0) 474.95.62.08 Internet: www.sferaco.fr E-mail : sferaco@sferaco.fr

Information provided as an indication and subject to possible modification