OJ5114

Retro-reflective laser sensor

OJPLFPKG/FO/AS

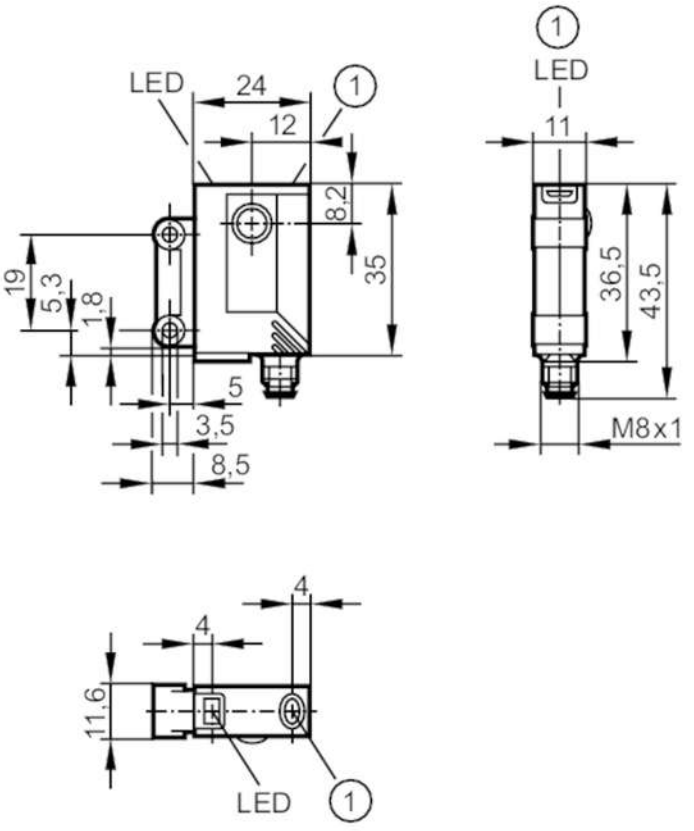

1 pushbutton

Product characteristics		
Type of light		red light
Laser protection class		1
Housing		rectangular
Application		
Special feature		polarisation filter
Function principle		Retro-reflective sensor
Electrical data		
Operating voltage	[V]	10...30 DC
Current consumption	[mA]	< 15
Protection class		III
Reverse polarity protection		yes
Type of light		red light
Wave length	[nm]	650
Typ. lifetime	[h]	50000
Outputs		
Electrical design		PNP
Output function		light-on/dark-on mode; (programmable)

OJ5114

Retro-reflective laser sensor

OJPLFPKG/FO/AS

Max. voltage drop switching output DC	[V]	2.5	
Permanent current rating of switching output DC	[mA]	200	
Switching frequency DC	[Hz]	2000	
Short-circuit protection		yes	
Type of short-circuit protection		pulsed	
Overload protection		yes	
Detection zone			
Range referred to prismatic reflector	[m]	8; (Prismatic reflector 50 x 50 mm E20722)	
Range adjustable		yes	
Diameter of the smallest detectable object	[mm]	2.5; (0,1 m; 2,5 m: 4; 5 m: 8)	
Max. light spot diameter	[mm]	12	
Light spot dimensions refer to		at maximum range	
Polarisation filter available		yes	
Operating conditions			
Ambient temperature	[°C]	-10...60	
Protection		IP 67	
Tests / approvals			
EMC		EN 60947-5-2	
Laser protection class		1	
Notes on laser protection		Caution:	laser light
		laser class:	1
			EN / IEC60825-1:2007
			EN / IEC60825-1:2014
			Complies with 21 CFR 1040 except for deviations pursuant to Laser Notice No. 50, dated June 2007.
MTTF	[years]	706	
Mechanical data			
Weight	[g]	27.9	
Housing		rectangular	
Dimensions	[mm]	35 x 24 x 11	
Materials		housing: ABS; LED window: SEPS; pushbutton: SEPS	
Lens material		glass	
Lens alignment		front lens	
Displays / operating elements			
Display		switching status	1 x LED, yellow
		operation	1 x LED, green
		function	1 x LED, red
Electronic lock		yes	

OJ5114

Retro-reflective laser sensor

OJPLFPKG/FO/AS

Accessories	
Items supplied	screws: 2
	spring washers: 2
	Nuts: 2

Remarks	
Remarks	operating voltage "supply class 2" according to cULus
Pack quantity	1 pcs.

Electrical connection

Connector: 1 x M8; coding: A



Connection

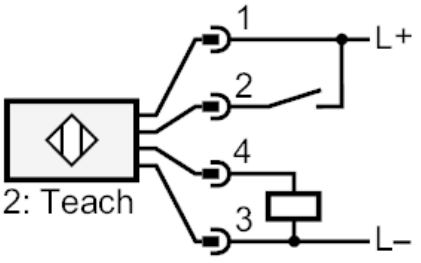

2	Teach

OJ5114

Retro-reflective laser sensor

OJPLFPKG/FO/AS

Diagrams and graphs

excess gain graph

